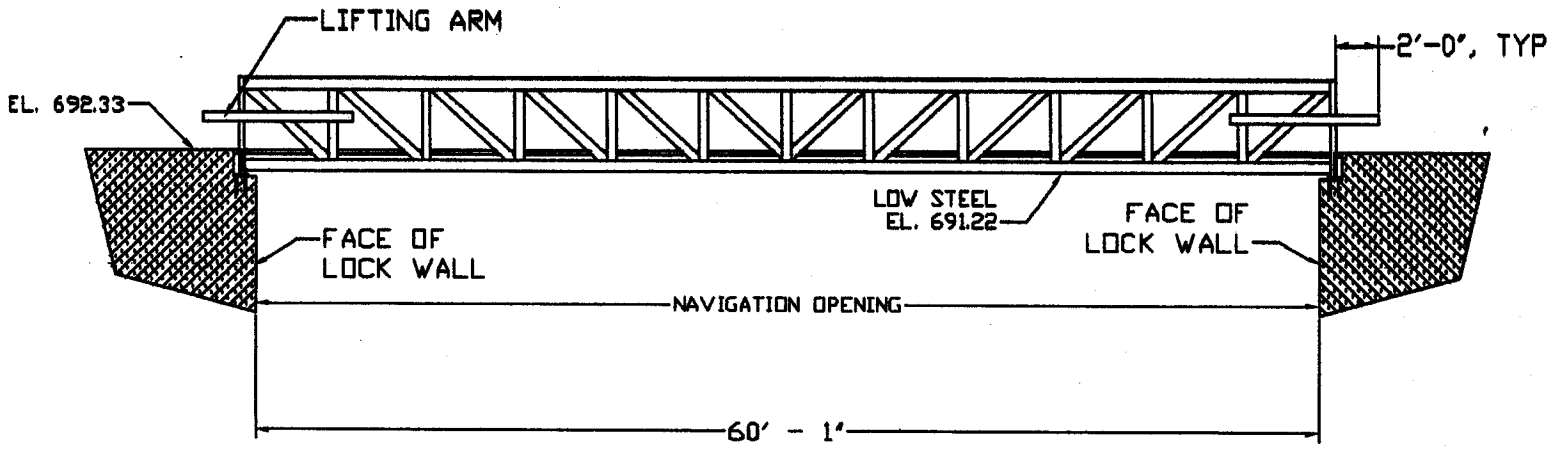

ELEVATION VIEW

10 Feet

1 Inch

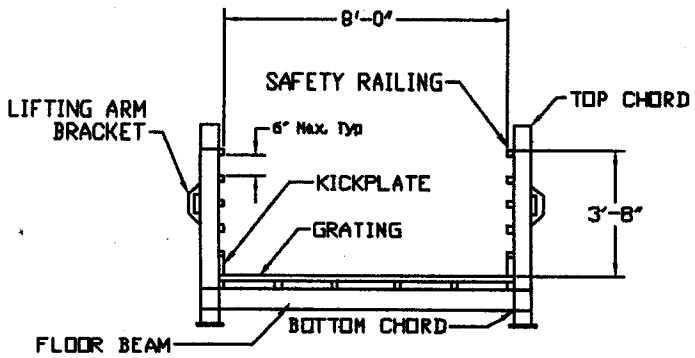

SECTION VIEW

5 Feet

1 Inch

PROPOSED PEDESTRIAN BRIDGE AT CHICKMAUGA LOCK
TENNESSEE RIVER MILE 470.8 (KM 757.6)

over	TENNESSEE RIVER
near	CHATTANOOGA, TN
county	HAMILTON CO., TN
application by	TENNESSEE VALLEY AUTHORITY
date	JULY 2003
revised	April 2004
sheet	4 of 4