NAVSTAR GLOBAL POSITIONING SYSTEM

INTERFACE SPECIFICATION
IS-GPS-200
Revision D
IRN-200D-001
7 March 2006

Navstar GPS Space Segment/Navigation User Interfaces

// SIGNED //

Deputy System Program Director
GPS JOINT PROGRAM OFFICE

Headquarters
Space and Missile Systems Center (SMC)
Navstar GPS Joint Program Office (SMC/GP)
2420 Vela Way, Suite 1866
El Segundo, CA 90245-4659
U.S.A.

By
ARINC Engineering Services, LLC
2250 E. Imperial Highway, Suite 450
El Segundo, CA 90245
U.S.A.
Cage Code: 0VYX1

DISTRIBUTION STATEMENT A. APPROVED FOR PUBLIC RELEASE; DISTRIBUTION IS UNLIMITED

(This page intentionally left blank.)

REVISION RECORD			
REV	DESCRIPTION	DOCUMENT DATE	APPROVED
NC	Initial Release	25 Jan 1983	
A	Incorporates IRN-200NC-001, IRN-200NC-002, and IRN-200NC-003	25 Sep 1984	
B	Incorporates IRN-200A-001A	30 Nov 1987	
C	Incorporates IRN-200B-001 thru IRN-200B-007	10 Oct 1993	
C	Re-formatted in Microsoft Word 6.0 in GEMS compatible format	10 Oct 1993	12 Jan 1996
C	Changed distribution status to Public Release	25 Sep 1997	20 Oct 1997
D	Incorporates IRN-200C-001 thru IRN-200C-005R1, change ICD-GPS-200 to IS-GPS-200, introduce and specify the requirements of Improved Clock and Ephemeris (ICE) message for L2 C signal, and other additional updates	7 Dec 2004	23 Nov 2004
IRN-200D-001	Adds additional PRN sequences to Section 6	7 Mar 2006	9 Mar 2006

(This page intentionally left blank.)

Page Revision Record

Pages	Revision	Pages	Revision
i	IRN-200D-001		
ii	D		
iii	IRN-200D-001		
iv	D		
v	IRN-200D-001		
vi	D		
vii - xi	IRN-200D-001		
xii - xiii	D		
xiv - xvi	IRN-200D-001		
1 – 5	D		
6	IRN-200D-001		
7 – 17	D		
18	IRN-200D-001		
19 – 56	D		
56a – 56l	IRN-200D-001		
57 – 193	D		

(This page intentionally left blank.)

TABLE OF CONTENTS

1. SCOPE 1

1.1 Scope 1

1.2 IS Approval and Changes 1

2. APPLICABLE DOCUMENTS 3

2.1 Government Documents 3

2.2 Non-Government Documents 3

3. REQUIREMENTS 5

3.1 Interface Definition 5

3.2 Interface Identification 5

3.2.1 Ranging Codes 5

3.2.1.1 P-Code 6

3.2.1.2 Y-Code 6

3.2.1.3 C/A-Code 6

3.2.1.4 L2 CM-Code (IIR-M, IIF, and subsequent blocks) 6

3.2.1.5 L2 CL-Code (IIR-M, IIF, and subsequent blocks) 6

3.2.1.6 Non-Standard Codes 11

3.2.2 NAV Data 11

3.2.3 L1/L2 Signal Structure 12

3.3 Interface Criteria 14

3.3.1 Composite Signal 14

3.3.1.1 Frequency Plan 14

3.3.1.2 Correlation Loss 14

3.3.1.3 Carrier Phase Noise 14

3.3.1.4 Spurious Transmissions 14

3.3.1.5 Phase Quadrature 15

3.3.1.6 User-Received Signal Levels 15

3.3.1.7 Equipment Group Delay 17

3.3.1.7.1 Group Delay Uncertainty 17

3.3.1.7.2 Group Delay Differential 17

3.3.1.8 Signal Coherence 17

3.3.1.9 Signal Polarization 17

3.3.2 PRN Code Characteristics 18

3.3.2.1 Code Structure 18

3.3.2.2 P-Code Generation 20
3.3.2.3 C/A-Code Generation 30
3.3.2.4 L2 CM-/L2 CL-Code Generation 35
3.3.3 Navigation Data 38
3.3.3.1 Navigation Data Modulation (L2 CM) 38
3.3.3.1.1 Forward Error Correction 38
3.3.4 GPS Time and SV Z-Count 40
4. NOT APPLICABLE 43
5. NOT APPLICABLE 45
6. NOTES 47
6.1 Acronyms 47
6.2 Definitions 51
6.2.1 User Range Accuracy 51
6.2.2 SV Block Definitions 51
6.2.2.1 Developmental SVs 51
6.2.2.2 Operational SVs 51
6.2.2.2.1 Block II SVs 51
6.2.2.2.2 Block IIA SVs 51
6.2.2.2.3 Block IIR SVs 52
6.2.2.2.4 Block IIR-M SVs 52
6.2.2.2.5 Block IIF SVs 52
6.2.3 Operational Interval Definitions 52
6.2.3.1 Normal Operations 52
6.2.3.2 Short-term Extended Operations 52
6.2.3.3 Long-term Extended Operations 52
6.2.4 GPS Week Number 53
6.2.5 L5 Civil Signal 53
6.3 Supporting Material 53
6.3.1 Received Signals 53
6.3.2 Extended Navigation Mode (Block II/IIA) 55
6.3.3 Block IIA Mode (Block IIR/IIR-M) 56
6.3.4 Autonomous Navigation Mode 56
6.3.5 PRN Code sequences expansion 56a
6.3.5.1 Additional C/A-code PRN sequences 56a
6.3.5.2 Additional P-Code PRN sequences 56b

6.3.5.2.1 Additional P-code Generation 56b
6.3.5.3 Additional L2 CM-/L2 CL-Code PRN sequences 56i
10. APPENDIX I. LETTERS OF EXCEPTION 57
10.1 Scope 57
10.2 Applicable Documents 57
10.3 Letters of Exception 57
20. APPENDIX II. GPS NAVIGATION DATA STRUCTURE FOR DATA, D(t) 65
20.1 Scope 65
20.2 Applicable Documents. 65
20.2.1 Government Documents 65
20.2.2 Non-Government Documents 65
20.3 Requirements 67
20.3.1 Data Characteristics 67
20.3.2 Message Structure 67
20.3.3 Message Content 81
20.3.3.1 Telemetry Word 81
20.3.3.2 Handover Word (HOW) 81
20.3.3.3 Subframe 1 83
20.3.3.3.1 Subframe 1 Content 83
20.3.3.3.2 Subframe 1 Parameter Characteristics 86
20.3.3.3.3 User Algorithms for Subframe 1 Data 86
20.3.3.4 Subframes 2 and 3 93
20.3.3.4.1 Content of Subframes 2 and 3 93
20.3.3.4.2 Subframe 2 and 3 Parameter Characteristics 95
20.3.3.4.3 User Algorithm for Ephemeris Determination 95
20.3.3.4.4 NMCT Validity Time 101
20.3.3.5 Subframes 4 and 5 102
20.3.3.5.1 Content of Subframes 4 and 5 102
20.3.3.5.2 Algorithms Related to Subframe 4 and 5 Data 117
20.3.4 Timing Relationships 126
20.3.4.1 Paging and Cutovers 126
20.3.4.2 SV Time vs. GPS Time 126
20.3.4.3 Speed of Light 126
20.3.4.4 Data Sets 127
20.3.4.5 Reference Times 130

20.3.5 Data Frame Parity 133
20.3.5.1 SV/CS Parity Algorithm 133
20.3.5.2 User Parity Algorithm 133
30. APPENDIX III. GPS NAVIGATION DATA STRUCTURE FOR CNAV DATA, $D_C(t)$ 137
30.1 Scope 137
30.2 Applicable Documents. 137
30.2.1 Government Documents 137
30.2.2 Non-Government Documents 137
30.3 Requirements 139
30.3.1 Data Characteristics 139
30.3.2 Message Structure 139
30.3.3 Message Content 139
30.3.3.1 Message Type 10 and 11 Ephemeris and Health Parameters 155
30.3.3.1.1 Message Type 10 and 11 Ephemeris and Health Parameter Content 155
30.3.3.1.2 Message Type 10 and 11 Ephemeris Parameter Characteristics 158
30.3.3.1.3 User Algorithm for Determination of SV Position 158
30.3.3.2 Message Types 30 Through 37 SV Clock Correction Parameters. 163
30.3.3.2.1 Message Type 30 Through 37 SV Clock Correction Parameter Content 163
30.3.3.2.2 Clock Parameter Characteristics 163
30.3.3.2.3 User Algorithms for SV Clock Correction Data 163
30.3.3.2.4 SV Clock Accuracy Estimates 165
30.3.3.3 Message Type 30 Ionospheric and Group Delay Correction Parameters 168
30.3.3.3.1 Message Type 30 Ionospheric and Group Delay Correction Parameter Content 168
30.3.3.4 Message Types 31, 12, and 37 Almanac Parameters 171
30.3.3.4.1 Almanac Reference Week 171
30.3.3.4.2 Almanac Reference Time 171
30.3.3.4.3 SV PRN Number 171
30.3.3.4.4 Signal Health (L1/L2/L5) 171
30.3.3.4.5 Midi Almanac Parameter Content 172
30.3.3.4.6 Reduced Almanac Parameter Content 172
30.3.3.5 Message Type 32 Earth Orientation Parameters (EOP) 175
30.3.3.5.1 EOP Content 175
30.3.3.6 Message Type 33 Coordinated Universal Time (UTC) Parameters 179
30.3.3.6.1 UTC Parameter Content 179
30.3.3.6.2 UTC and GPS Time 179

30.3.3.7 Message Types 34, 13, and 14 Differential Correction Parameters 181
30.3.3.7.1 Differential Correction Parameters Content 181
30.3.3.7.2 DC Data Packet 181
30.3.3.7.3 Application of Clock-Related DC Data 184
30.3.3.7.4 Application of Orbit-Related DC Data 184
30.3.3.7.5 SV Differential Range Accuracy Estimates 186
30.3.3.8 Message Type 35 GPS/GNSS Time Offset 187
30.3.3.8.1 GPS/GNSS Time Offset Parameter Content 187
30.3.3.8.2 GPS and GNSS Time 187
30.3.3.9 Message Types 36 and 15 Text Messages 188
30.3.4 Timing Relationships 189
30.3.4.1 Paging and Cutovers 189
30.3.4.2 SV Time vs. GPS Time 190
30.3.4.3 Speed of Light 190
30.3.5 Data Frame Parity 191
30.3.5.1 Parity Algorithm 191

LIST OF FIGURES

Figure 3-1. Generation of P-, C/A-Codes and Modulating Signals 19
Figure 3-2. X1A Shift Register Generator Configuration 21
Figure 3-3. X1B Shift Register Generator Configuration 22
Figure 3-4. X2A Shift Register Generator Configuration 23
Figure 3-5. X2B Shift Register Generator Configuration 24
Figure 3-6. P-Code Generation 26
Figure 3-7. P-Code Signal Component Timing 27
Figure 3-8. G1 Shift Register Generator Configuration 31
Figure 3-9. G2 Shift Register Generator Configuration 32
Figure 3-10. Example C/A-Code Generation 33
Figure 3-11. C/A-Code Timing Relationships 34
Figure 3-12. L2 CM-/L2 CL-Code Timing Relationships 36
Figure 3-13. L2 CM/L2 CL Shift Register Generator Configuration 37
Figure 3-14. Convolutional Encoder 39
Figure 3-15. Convolutional Transmit/Decoding Timing Relationships 39
Figure 3-16. Time Line Relationship of HOW Message 42
Figure 6-1. User Received Minimum Signal Level Variations (Example, Block II/IIA/IIR) 54
Figure 10-1. Letters of Exception. 59
Figure 20-1. Data Format 69
Figure 20-2. TLM and HOW Formats 82
Figure 20-3. Sample Application of Correction Parameters 92
Figure 20-4. Ionospheric Model 123
Figure 20-5. Example Flow Chart for User Implementation of Parity Algorithm 135
Figure 30-1. Message Type 10 - Ephemeris 1 141
Figure 30-2. Message Type 11 - Ephemeris 2 142
Figure 30-3. Message Type 30 - Clock, IONO & Group Delay 143
Figure 30-4. Message Type 31 - Clock & Reduced Almanac 144
Figure 30-5. Message Type 32 - Clock & EOP 145
Figure 30-6. Message Type 33 - Clock & UTC 146
Figure 30-7. Message Type 34 - Clock & Differential Correction 147
Figure 30-8. Message Type 35 - Clock & GGTO 148
Figure 30-9. Message Type 36 - Clock & Text 149
Figure 30-10. Message Type 37 - Clock & Midi Almanac 150

Figure 30-11. Message Type 12 - Reduced Almanac 151
Figure 30-12. Message Type 13 – Clock Differential Correction 152
Figure 30-13. Message Type 14 – Ephemeris Differential Correction 153
Figure 30-14. Message Type 15 - Text 154
Figure 30-15. Reduced Almanac Packet Content 174
Figure 30-16. Differential Correction Data Packet 182

LIST OF TABLES

Table 3-I. Code Phase Assignments 7
Table 3-II. Code Phase Assignments (IIR-M, IIF, and subsequent blocks only) 9
Table 3-III. Signal Configuration 13
Table 3-IV. Composite L1 Transmitted Signal Phase 16
Table 3-V. Received Minimum RF Signal Strength 16
Table 3-VI. P-Code Reset Timing 28
Table 3-VII. Final Code Vector States 29
Table 6-I Additional C/A-/P-Code Phase Assignments 56c
Table 6-II. Additional L2 CM-/L2 CL-Code Phase Assignments 56i
Table 20-I. Subframe 1 Parameters 87
Table 20-II. Ephemeris Data Definitions 94
Table 20-III. Ephemeris Parameters 96
Table 20-IV. Elements of Coordinate Systems 97
Table 20-V. Data IDs and SV IDs in Subframes 4 and 5 105
Table 20-VI. Almanac Parameters 107
Table 20-VII. NAV Data Health Indications 109
Table 20-VIII. Codes for Health of SV Signal Components 110
Table 20-IX. UTC Parameters 113
Table 20-X. Ionospheric Parameters 114
Table 20-XI. IODC Values and Data Set Lengths (Block II/IIA) 128
Table 20-XII. IODC Values and Data Set Lengths (Block IIR/IIR-M/IIF) 129
Table 20-XIII. Reference Times 132
Table 20-XIV. Parity Encoding Equations 134
Table 30-I. Message Types 10 and 11 Parameters 159
Table 30-II. Elements of Coordinate System 161
Table 30-III. Clock Correction and Accuracy Parameters 164
Table 30-IV. Group Delay Differential Parameters 168
Table 30-V. Midi Almanac Parameters 173
Table 30-VI. Reduced Almanac Parameters 174
Table 30-VII. Earth Orientation Parameters 176
Table 30-VIII. Application of EOP Parameters 177
Table 30-IX. UTC Parameters 180
Table 30-X. Differential Correction Parameters 183

Table 30-XI. GPS/GNSS Time Offset Parameters 188
Table 30-XII. Message Broadcast Intervals 189

(This page intentionally left blank.)

1. SCOPE

1.1 Scope. This Interface Specification (IS) defines the requirements related to the interface between the Space Segment (SS) of the Global Positioning System (GPS) and the navigation User Segment (US) of the GPS for radio frequency (RF) link 1 (L1) and link 2 (L2).

1.2 IS Approval and Changes. ARINC Engineering Services, LLC has been designated the Interface Control Contractor (ICC), and is responsible for the basic preparation, approval, distribution, retention, and Interface Control Working Group (ICWG) coordination of the IS in accordance with GP-03-001. The Navstar GPS Joint Program Office is the necessary authority to make this IS effective. The Joint Program Office (JPO) administers approvals under the auspices of the Configuration Control Board (CCB), which is governed by the appropriate JPO Operating Instruction (OI). Military organizations and contractors are represented at the CCB by their respective segment member. All civil organizations and public interest are represented by the Department of Transportation representative of the GPS JPO.

A proposal to change the approved version of this IS can be submitted by any ICWG participating organization to the GPS JPO and/or the ICC. The ICC is responsible for the preparation of the change paper and change coordination, in accordance with GP-03-001. The ICC prepares the change paper as a Proposed Interface Revision Notice (PIRN) and is responsible for coordination of PIRNs with the ICWG. The ICWG coordinated PIRN must be submitted to the GPS JPO CCB for review and approval.

The ICWG review period for all Proposed Interface Revisions Notices (PIRNs) is 45 days after receipt by individual addressees. A written request to extend the review period may be submitted to the ICC for consideration.

(This page intentionally left blank.)

2. APPLICABLE DOCUMENTS

2.1 Government Documents. The following documents of the issue specified contribute to the definition of the interfaces between the GPS Space Segment and the GPS navigation User Segment, and form a part of this IS to the extent specified herein.

Specifications

Federal

None

Military

None

Other Government Activity

None

Standards

Federal

None

Military

None

Other Publications

GP-03-001 14 Nov 2003	GPS Interface Control Working Group Charter

2.2 Non-Government Documents. The following documents of the issue specified contribute to the definition of the interfaces between the GPS Space Segment and the GPS Navigation User Segment and form a part of this IS to the extent specified herein.

Specifications

None

Other Publications

None

(This page intentionally left blank.)

3. REQUIREMENTS

3.1 Interface Definition. The interface between the GPS Space Segment (SS) and the GPS navigation User Segment (US) includes two RF links, L1 and L2. Utilizing these links, the space vehicles (SVs) of the SS shall provide continuous earth coverage signals that provide to the US the ranging codes and the system data needed to accomplish the GPS navigation (NAV) mission. These signals shall be available to a suitably equipped user with RF visibility to an SV.

3.2 Interface Identification. The carriers of L1 and L2 are typically modulated by one or more bit trains, each of which normally is a composite generated by the modulo-2 addition of a pseudo-random noise (PRN) ranging code and the downlink system data (referred to as NAV data).

3.2.1 Ranging Codes. Three PRN ranging codes are transmitted: the precision (P) code which is the principal NAV ranging code; the Y-code, used in place of the P-code whenever the anti-spoofing (A-S) mode of operation is activated; and the coarse/acquisition (C/A) code which is used for acquisition of the P (or Y) code (denoted as P(Y)) and as a civil ranging signal. Code-division-multiple-access techniques allow differentiating between the SVs even though they may transmit at the same frequencies. The SVs will transmit intentionally "incorrect" versions of the C/A and the P(Y) codes where needed to protect the users from receiving and utilizing anomalous NAV signals as a result of a malfunction in the SV's reference frequency generation system. These two "incorrect" codes are termed non-standard C/A (NSC) and non-standard Y (NSY) codes.

For Block IIR-M, IIF, and subsequent blocks of SVs, two additional PRN ranging codes are transmitted. They are the L2 civil-moderate (L2 CM) code and the L2 civil-long (L2 CL) code. The SVs will transmit intentionally "incorrect" versions of the L2 CM and L2 CL codes where needed to protect the users from receiving and utilizing anomalous NAV signals as a result of a malfunction in the SV's reference frequency generation system. These "incorrect" codes are termed non-standard L2 CM (NSCM) and non-standard L2 CL (NSCL) codes. The SVs shall also be capable of initiating and terminating the broadcast of NSCM and/or NSCL code(s) independently of each other, in response to CS command.

3.2.1.1 P-Code. The PRN P-code for SV ID number i is a ranging code, $P_i(t)$, of 7 days in length at a chipping rate of 10.23 Mbps. The 7 day sequence is the modulo-2 sum of two sub-sequences referred to as X1 and $X2_i$; their lengths are 15,345,000 chips and 15,345,037 chips, respectively. The $X2_i$ sequence is an X2 sequence selectively delayed by 1 to 37 chips thereby allowing the basic code generation technique to produce a set of 37 mutually exclusive P-code sequences of 7 days in length. Of these, 32 are designated for use by SVs and 5 are reserved for other purposes (e.g. ground transmitters, etc.). Assignment of these code phase segments by SV-ID number (or other use) is given in Table 3-I. Additional PRN P-code sequences with assigned PRN numbers are provided in Section 6.3.5.2, Table 6-I

3.2.1.2 Y-Code. The PRN Y-code is used in place of the P-code when the A-S mode of operation is activated.

3.2.1.3 C/A-Code. The PRN C/A-Code for SV ID number i is a Gold code, $G_i(t)$, of 1 millisecond in length at a chipping rate of 1023 Kbps. The $G_i(t)$ sequence is a linear pattern generated by the modulo-2 addition of two sub-sequences, G1 and $G2_i$, each of which is a 1023 chip long linear pattern. The epochs of the Gold code are synchronized with the X1 epochs of the P-code. As shown in Table 3-I, the $G2_i$ sequence is a G2 sequence selectively delayed by pre-assigned number of chips, thereby generating a set of different C/A-codes. Assignment of these by GPS PRN signal number is given in Table 3-I. Additional PRN C/A-code sequences with assigned PRN numbers are provided in Section 6.3.5.1, Table 6-I

3.2.1.4 L2 CM-Code (IIR-M, IIF, and subsequent blocks). The PRN L2 CM-code for SV ID number i is a ranging code, $C_{M,i}(t)$, which is 20 milliseconds in length at a chipping rate of 511.5 Kbps. The epochs of the L2 CM-code are synchronized with the X1 epochs of the P-code. The $C_{M,i}(t)$ sequence is a linear pattern which is short cycled every count of 10230 chips by resetting with a specified initial state. Assignment of initial states by GPS PRN signal number is given in Table 3-II. Additional PRN L2 CM-code sequence pairs are provided in Section 6.3.5.3, Table 6-II

3.2.1.5 L2 CL-Code (IIR-M, IIF, and subsequent blocks). The PRN L2 CL-code for SV ID number i is a ranging code, $C_{L,i}(t)$, which is 1.5 seconds in length at a chipping rate of 511.5 Kbps. The epochs of the L2 CL-code are synchronized with the X1 epochs of the P-code. The $C_{L,i}(t)$ sequence is a linear pattern which is generated using the same code generator polynomial as the one used for $C_{M,i}(t)$. However, the $C_{L,i}(t)$ sequence is short cycled by resetting with a specified initial state every code count of 767250 chips. Assignment of initial states by GPS PRN signal number is given in Table 3-II. Additional PRN L2 CL-code sequence pairs are provided in Section 6.3.5.3, Table 6-II

Table 3-I. Code Phase Assignments (sheet 1 of 2)

SV ID No.	GPS PRN Signal No.	Code Phase Selection		Code Delay Chips		First 10 Chips Octal* C/A	First 12 Chips Octal P
		C/A($G2_i$)****	($X2_i$)	C/A	P		
1	1	2 ⊕ 6	1	5	1	1440	4444
2	2	3 ⊕ 7	2	6	2	1620	4000
3	3	4 ⊕ 8	3	7	3	1710	4222
4	4	5 ⊕ 9	4	8	4	1744	4333
5	5	1 ⊕ 9	5	17	5	1133	4377
6	6	2 ⊕ 10	6	18	6	1455	4355
7	7	1 ⊕ 8	7	139	7	1131	4344
8	8	2 ⊕ 9	8	140	8	1454	4340
9	9	3 ⊕ 10	9	141	9	1626	4342
10	10	2 ⊕ 3	10	251	10	1504	4343
11	11	3 ⊕ 4	11	252	11	1642	|
12	12	5 ⊕ 6	12	254	12	1750	|
13	13	6 ⊕ 7	13	255	13	1764	|
14	14	7 ⊕ 8	14	256	14	1772	|
15	15	8 ⊕ 9	15	257	15	1775	|
16	16	9 ⊕ 10	16	258	16	1776	|
17	17	1 ⊕ 4	17	469	17	1156	|
18	18	2 ⊕ 5	18	470	18	1467	|
19	19	3 ⊕ 6	19	471	19	1633	4343

* In the octal notation for the first 10 chips of the C/A code as shown in this column, the first digit (1) represents a "1" for the first chip and the last three digits are the conventional octal representation of the remaining 9 chips. (For example, the first 10 chips of the C/A code for PRN Signal Assembly No. 1 are: 1100100000).

** C/A codes 34 and 37 are common.

*** PRN sequences 33 through 37 are reserved for other uses (e.g. ground transmitters).

**** The two-tap coder utilized here is only an example implementation that generates a limited set of valid C/A codes.

⊕ = "exclusive or"

NOTE: The code phase assignments constitute inseparable pairs, each consisting of a specific C/A and a specific P code phase, as shown above.

Table 3-I. Code Phase Assignments (sheet 2 of 2)

SV ID No.	GPS PRN Signal No.	Code Phase Selection		Code Delay Chips		First 10 Chips Octal* C/A	First 12 Chips Octal P
		C/A($G2_i$)****	($X2_i$)	C/A	P		
20	20	4 ⊕ 7	20	472	20	1715	4343
21	21	5 ⊕ 8	21	473	21	1746	|
22	22	6 ⊕ 9	22	474	22	1763	|
23	23	1 ⊕ 3	23	509	23	1063	|
24	24	4 ⊕ 6	24	512	24	1706	|
25	25	5 ⊕ 7	25	513	25	1743	|
26	26	6 ⊕ 8	26	514	26	1761	|
27	27	7 ⊕ 9	27	515	27	1770	|
28	28	8 ⊕ 10	28	516	28	1774	|
29	29	1 ⊕ 6	29	859	29	1127	|
30	30	2 ⊕ 7	30	860	30	1453	|
31	31	3 ⊕ 8	31	861	31	1625	|
32	32	4 ⊕ 9	32	862	32	1712	|
***	33	5 ⊕ 10	33	863	33	1745	|
***	34**	4 ⊕ 10	34	950	34	1713	|
***	35	1 ⊕ 7	35	947	35	1134	|
***	36	2 ⊕ 8	36	948	36	1456	|
***	37**	4 ⊕ 10	37	950	37	1713	4343

* In the octal notation for the first 10 chips of the C/A code as shown in this column, the first digit (1) represents a "1" for the first chip and the last three digits are the conventional octal representation of the remaining 9 chips. (For example, the first 10 chips of the C/A code for PRN Signal Assembly No. 1 are: 1100100000).

** C/A codes 34 and 37 are common.

*** PRN sequences 33 through 37 are reserved for other uses (e.g. ground transmitters).

**** The two-tap coder utilized here is only an example implementation that generates a limited set of valid C/A codes.

⊕ = "exclusive or"

NOTE: The code phase assignments constitute inseparable pairs, each consisting of a specific C/A and a specific P code phase, as shown above.

Table 3-II. Code Phase Assignments (IIR-M, IIF, and subsequent blocks only) (sheet 1 of 2)

SV ID No.	GPS PRN Signal No.	Initial Shift Register State (Octal)		End Shift Register State (Octal)	
		L2 CM	L2 CL	L2 CM *	L2 CL **
1	1	742417664	624145772	552566002	267724236
2	2	756014035	506610362	034445034	167516066
3	3	002747144	220360016	723443711	771756405
4	4	066265724	710406104	511222013	047202624
5	5	601403471	001143345	463055213	052770433
6	6	703232733	053023326	667044524	761743665
7	7	124510070	652521276	652322653	133015726
8	8	617316361	206124777	505703344	610611511
9	9	047541621	015563374	520302775	352150323
10	10	733031046	561522076	244205506	051266046
11	11	713512145	023163525	236174002	305611373
12	12	024437606	117776450	654305531	504676773
13	13	021264003	606516355	435070571	272572634
14	14	230655351	003037343	630431251	731320771
15	15	001314400	046515565	234043417	631326563
16	16	222021506	671511621	535540745	231516360
17	17	540264026	605402220	043056734	030367366
18	18	205521705	002576207	731304103	713543613
19	19	064022144	525163451	412120105	232674654

* Short cycled period = 10230
** Short cycled period = 767250
*** PRN sequences 33 through 37 are reserved for other uses (e.g. ground transmitters).

NOTE: There are many other available initial register states which can be used for other signal transmitters including any additional SVs in future.

Table 3-II. Code Phase Assignments (IIR-M, IIF, and subsequent blocks only) (sheet 2 of 2)

SV ID No.	GPS PRN Signal No.	Initial Shift Register State (Octal)		End Shift Register State (Octal)	
		L2 CM	L2 CL	L2 CM *	L2 CL **
20	20	120161274	266527765	365636111	641733155
21	21	044023533	006760703	143324657	730125345
22	22	724744327	501474556	110766462	000316074
23	23	045743577	743747443	602405203	171313614
24	24	741201660	615534726	177735650	001523662
25	25	700274134	763621420	630177560	023457250
26	26	010247261	720727474	653467107	330733254
27	27	713433445	700521043	406576630	625055726
28	28	737324162	222567263	221777100	476524061
29	29	311627434	132765304	773266673	602066031
30	30	710452007	746332245	100010710	012412526
31	31	722462133	102300466	431037132	705144501
32	32	050172213	255231716	624127475	615373171
***	33	500653703	437661701	154624012	041637664
***	34	755077436	717047302	275636742	100107264
***	35	136717361	222614207	644341556	634251723
***	36	756675453	561123307	514260662	257012032
***	37	435506112	240713073	133501670	703702423

* Short cycled period = 10230
** Short cycled period = 767250
*** PRN sequences 33 through 37 are reserved for other uses (e.g. ground transmitters).

NOTE: There are many other available initial register states which can be used for other signal transmitters including any additional SVs in future.

3.2.1.6 Non-Standard Codes. The NSC, NSCM, NSCL, and NSY codes, used to protect the user from a malfunction in the SV's reference frequency system (reference paragraph 3.2.1), are not for utilization by the user and, therefore, are not defined in this document.

3.2.2 NAV Data. The NAV data, D(t), includes SV ephemerides, system time, SV clock behavior data, status messages and C/A to P (or Y) code handover information, etc. The 50 bps data is modulo-2 added to the P(Y)- and C/A- codes; the resultant bit-trains are used to modulate the L1 and L2 carriers. For a given SV, the data train D(t), if present, is common to the P(Y)- and C/A- codes on both the L1 and L2 channels. The content and characteristics of the NAV data, D(t), are given in Appendix II of this document.

For Block IIR-M, Block IIF, and subsequent blocks of SVs, civil navigation (CNAV) data, $D_C(t)$, also includes SV ephemerides, system time, SV clock behavior, status messages, etc. The $D_C(t)$ is a 25 bps data stream which is coded by a rate ½ convolutional coder. When selected by ground command, the resulting 50 sps symbol stream is modulo-2 added to the L2 CM-code; the resultant bit-train is combined with L2 CL-code using chip by chip time-division multiplexing method (i.e. alternating between L2 CM ⊕ data and L2 CL chips); the multiplexed bit-train is used to modulate the L2 carrier. The content and characteristics of the CNAV data, $D_C(t)$, are given in Appendix III of this document.

During the initial period of Block IIR-M SVs operation, prior to Initial Operational Capability of L2 C signal, Block IIR-M may modulo-2 add the NAV data, D(t), to the L2 CM-code instead of CNAV data, $D_C(t)$. Moreover, the NAV data, D(t), can be used in one of two different data rates which are selectable by ground command. D(t) with a data rate of 50 bps can be commanded to be modulo-2 added to the L2 CM-code, or D(t) with a symbol rate of 50 symbols per second (sps) (rate ½ convolutional encode of a 25 bps NAV data) can be commanded to be modulo-2 added to the L2 CM-code. The resultant bit-train is combined with L2 CL-code using chip by chip time-division multiplexing method (i.e. alternating between L2 CM ⊕ data and L2 CL chips). This multiplexed bit-train is used to modulate the L2 carrier.

3.2.3 L1/L2 Signal Structure. The L1 consists of two carrier components which are in phase quadrature with each other. Each carrier component is bi-phase shift key (BPSK) modulated by a separate bit train. One bit train is the modulo-2 sum of the P(Y)-code and NAV data, D(t), while the other is the modulo-2 sum of the C/A-code and the NAV data, D(t). For Block II/IIA and IIR, the L2 is BPSK modulated by only one of those two bit trains; the bit train to be used for L2 modulation is selected by ground command. A third modulation mode is also selectable on the L2 channel by ground command: it utilizes the P(Y)-code without the NAV data as the modulating signal. For a particular SV, all transmitted signal elements (carriers, codes and data) are coherently derived from the same on-board frequency source.

For Block IIR-M, Block IIF, and subsequent blocks of SVs, the L2 consists of two carrier components. One carrier component is BPSK modulated by the bit train which is the modulo-2 sum of the P(Y)-code with or without NAV data D(t), while the other is BPSK modulated by any one of three other bit trains which are selectable by ground command. The three possible bit trains are: (1) the modulo-2 sum of the C/A-code and D(t); (2) the C/A-code with no data and; (3) a chip-by-chip time multiplex combination of bit trains consisting of the L2 CM-code with $D_C(t)$ and the L2 CL-code with no data. The L2 CM-code with the 50 sps symbol stream of $D_C(t)$ is time-multiplexed with L2 CL-code at a 1023 kHz rate as described in paragraph 3.2.2. The first L2 CM-code chip starts synchronously with the end/start of week epoch.

During the initial period of Block IIR-M SVs operation, prior to Initial Operational Capability of L2 C signal, Block IIR-M may modulo-2 add the NAV data, D(t), to the L2 CM-code instead of CNAV data, $D_C(t)$. In such configuration, the data rate of D(t) may be 50 bps (i.e. without convolution encoding) or it may be 25 bps. The D(t) of 25 bps shall be convolutionally encoded resulting in 50 sps.

The different configuration and combination of codes/signals specified in this section are shown in Table 3-III.

Table 3-III. Signal Configuration				
SV Blocks	L1		L2**	
	In-Phase*	Quadrature-Phase*	In-Phase*	Quadrature-Phase*
Block II/IIA/IIR	P(Y) ⊕ D(t)	C/A ⊕ D(t)	P(Y) ⊕ D(t) or P(Y) or C/A ⊕ D(t)	Not Applicable
Block IIR-M***	P(Y) ⊕ D(t)	C/A ⊕ D(t)	P(Y) ⊕ D(t) or P(Y)	L2 CM ⊕ D(t) with L2 CL or L2 CM ⊕ D′(t) with L2 CL or C/A ⊕ D(t) or C/A
Block IIR-M/IIF	P(Y) ⊕ D(t)	C/A ⊕ D(t)	P(Y) ⊕ D(t) or P(Y)	L2 CM ⊕ D_C(t) with L2 CL or C/A ⊕ D(t) or C/A

Notes: 1) The configuration identified in this table reflects only the content of Section 3.2.3 and does not show all available codes/signals on L1/L2.
2) It should be noted that there are no flags or bits in the navigation message to directly indicate which signal option is broadcast for L2 Civil (L2 C) signal.

⊕ = "exclusive-or" (modulo-2 addition)
D(t) = NAV data at 50 bps
D′(t) = NAV data at 25 bps with FEC encoding resulting in 50 sps
D_C(t) = CNAV data at 25 bps with FEC encoding resulting in 50 sps

* Terminology of "in-phase" and "quadrature-phase" is used only to identify the relative phase quadrature relationship of the carrier components (i.e. 90 degrees offset of each other).
** The two carrier components on L2 may not have the phase quadrature relationship. They may be broadcast on same phase (ref. Section 3.3.1.5).
*** Possible signal configuration for Block IIR-M only during the initial period of Block IIR-M SVs operation, prior to Initial Operational Capability of L2 C signal. See paragraph 3.2.2.

3.3 Interface Criteria. The criteria specified in the following define the requisite characteristics of the SS/US interface for the L1 and L2.

3.3.1 Composite Signal. The following criteria define the characteristics of the composite signals.

3.3.1.1 Frequency Plan. The signals shall be contained within two 20.46-MHz bands centered about L1 and L2. The carrier frequencies for the L1 and L2 signals shall be coherently derived from a common frequency source within the SV. The nominal frequency of this source -- as it appears to an observer on the ground -- is 10.23 MHz. The SV carrier frequency and clock rates -- as they would appear to an observer located in the SV -- are offset to compensate for relativistic effects. The clock rates are offset by $\Delta f/f = -4.4647E-10$, equivalent to a change in the P-code chipping rate of 10.23 MHz offset by a $\Delta f = -4.5674E-3$ Hz. This is equal to 10.22999999543 MHz. The nominal carrier frequencies (f_0) shall be 1575.42 MHz, and 1227.6 MHz for L1 and L2, respectively.

3.3.1.2 Correlation Loss. Correlation loss is defined as the difference between the SV power received in a 20.46 MHz bandwidth and the signal power recovered in an ideal correlation receiver of the same bandwidth. On the L1 and L2 channels, the worst case correlation loss occurs when the carrier is modulated by the sum of the P(Y) code and the NAV data stream. For this case, the correlation loss apportionment shall be as follows:

1. SV modulation imperfections 0.6 dB
2. Ideal UE receiver waveform distortion 0.4 dB
   (due to 20.46 MHz filter)

3.3.1.3 Carrier Phase Noise. The phase noise spectral density of the unmodulated carrier shall be such that a phase locked loop of 10 Hz one-sided noise bandwidth shall be able to track the carrier to an accuracy of 0.1 radians rms.

3.3.1.4 Spurious Transmissions. In-band spurious transmissions shall be at least 40 dB below the unmodulated L1 and L2 carriers over the allocated 20.46 MHz channel bandwidth.

3.3.1.5 Phase Quadrature. The two L1 carrier components modulated by the two separate bit trains (C/A-code plus data and P(Y)-code plus data) shall be in phase quadrature (within ±100 milliradians) with the C/A signal carrier lagging the P signal by 90 degrees. Referring to the phase of the P carrier when $P_i(t)$ equals zero as the "zero phase angle", the P(Y)- and C/A-code generator output shall control the respective signal phases in the following manner: when $P_i(t)$ equals one, a 180-degree phase reversal of the P-carrier occurs; when $G_i(t)$ equals one, the C/A carrier advances 90 degrees; when the $G_i(t)$ equals zero, the C/A carrier shall be retarded 90 degrees (such that when $G_i(t)$ changes state, a 180-degree phase reversal of the C/A carrier occurs). The resultant nominal composite transmitted signal phases as a function of the binary state of only the two modulating signals are as shown in Table 3-IV.

For Block IIR-M, IIF, and subsequent blocks of SVs, phase quadrature relationship between the two L2 carrier components can be the same as for the two L1 carrier components as described above. However, for the L2 case, the civil signal carrier component is modulated by any one of three (IIF) or four (IIR-M) different bit trains as described in paragraph 3.2.3. Moreover, the two L2 carrier components can be in same phase. The resultant composite transmitted signal phases will vary as a function of the binary state of the modulating signals as well as the signal power ratio and phase quadrature relationship. Beyond these considerations, additional carrier components in Block IIR-M, IIF, and subsequent blocks of SVs will result in composite transmitted signal phase relationships other than the nominal special case of Table 3-IV.

For Block IIF, the crosstalk between the C/A, when selected, and P(Y) signals shall not exceed –20 dB in the L1 and L2. The crosstalk is the relative power level of the undesired signal to the desired reference signal.

3.3.1.6 User-Received Signal Levels. The SV shall provide L1 and L2 navigation signal strength at end-of-life (EOL), worst-case, in order to meet the minimum levels specified in Table 3-V. The minimum received power is measured at the output of a 3 dB_i linearly polarized user receiving antenna (located near ground) at worst normal orientation, when the SV is above a 5-degree elevation angle. The received signal levels are observed within the in-band allocation defined in para. 3.3.1.1.

The Block IIF SV shall provide L1 and L2 signals with the following characteristic: the L1 off-axis power gain shall not decrease by more than 2 dB from the Edge-of-Earth (EOE) to nadir, nor more than 10 dB from EOE to 20 degrees off nadir, and no more than 18 dB from EOE to 23 degrees off nadir; the L2 off-axis power gain shall not decrease by more than 2 dB from EOE to nadir, and no more than 10 dB from EOE to 23 degrees off nadir; the power drop off between EOE and ±23 degrees shall be in a monotonically decreasing fashion.

Additional related data is provided as supporting material in paragraph 6.3.1.

Table 3-IV. Composite L1 Transmitted Signal Phase ** (Block II/IIA and IIR SVs Only)		
Nominal Composite L1 Signal Phase*	Code State	
	P	C/A
0°	0	0
-70.5°	1	0
+109.5°	0	1
180°	1	1

* Relative to 0, 0 code state with positive angles leading and negative angles lagging.
** Based on the composite of two L1 carrier components with 3 dB difference in the power levels of the two.

Table 3-V. Received Minimum RF Signal Strength				
SV Blocks	Channel	Signal		
		P(Y)		C/A or L2 C
II/IIA/IIR	L1	-161.5 dBW		-158.5 dBW
	L2	-164.5 dBW	or	-164.5 dBW
IIR-M/IIF	L1	-161.5 dBW		-158.5 dBW
	L2	-161.5 dBW		-160.0 dBW

3.3.1.7 Equipment Group Delay. Equipment group delay is defined as the delay between the signal radiated output of a specific SV (measured at the antenna phase center) and the output of that SV's on-board frequency source; the delay consists of a bias term and an uncertainty. The bias term is of no concern to the US since it is included in the clock correction parameters relayed in the NAV data, and is therefore accounted for by the user computations of system time (reference paragraphs 20.3.3.3.3.1, 30.3.3.2.3). The uncertainty (variation) of this delay as well as the group delay differential between the signals of L1 and L2 are defined in the following.

3.3.1.7.1 Group Delay Uncertainty. The effective uncertainty of the group delay shall not exceed 3.0 nanoseconds (two sigma).

3.3.1.7.2 Group Delay Differential. The group delay differential between the radiated L1 and L2 signals (i.e. L1 P(Y) and L2 P(Y), L1 P(Y) and L2 C) is specified as consisting of random plus bias components. The mean differential is defined as the bias component and will be either positive or negative. For a given navigation payload redundancy configuration, the absolute value of the mean differential delay shall not exceed 15.0 nanoseconds. The random variations about the mean shall not exceed 3.0 nanoseconds (two sigma). Corrections for the bias components of the group delay differential are provided to the US in the Nav message using parameters designated as T_{GD} (reference paragraph 20.3.3.3.3.2) and Inter-Signal Correction (ISC) (reference paragraph 30.3.3.3.1.1).

3.3.1.8 Signal Coherence. All transmitted signals for a particular SV shall be coherently derived from the same on-board frequency standard; all digital signals shall be clocked in coincidence with the PRN transitions for the P-signal and occur at the P-signal transition speed. On the L1 channel the data transitions of the two modulating signals (i.e., that containing the P(Y)-code and that containing the C/A-code), L1 P(Y) and L1 C/A, shall be such that the average time difference between the transitions does not exceed 10 nanoseconds (two sigma).

3.3.1.9 Signal Polarization. The transmitted signal shall be right-hand circularly polarized (RHCP). For the angular range of ±14.3 degrees from boresight, L1 ellipticity shall be no worse than 1.2 dB for Block II/IIA and shall be no worse than 1.8 dB for Block IIR/IIR-M/IIF SVs. L2 ellipticity shall be no worse than 3.2 dB for Block II/IIA SVs and shall be no worse than 2.2 dB for Block IIR/IIR-M/IIF over the angular range of ±14.3 degrees from boresight.

3.3.2 PRN Code Characteristics. The characteristics of the P-, L2 CM-, L2 CL-, and the C/A-codes are defined below in terms of their structure and the basic method used for generating them. Figure 3-1 depicts a simplified block diagram of the scheme for generating the 10.23 Mbps $P_i(t)$ and the 1.023 Mbps $G_i(t)$ patterns (referred to as P- and C/A-codes respectively), and for modulo-2 summing these patterns with the NAV bit train, D(t), which is clocked at 50 bps. The resultant composite bit trains are then used to modulate the signal carriers.

3.3.2.1 Code Structure. The $P_i(t)$ pattern (P-code) is generated by the modulo-2 summation of two PRN codes, X1(t) and X2(t - iT), where T is the period of one P-code chip and equals $(1.023 \times 10^7)^{-1}$ seconds, while i is an integer from 1 through 37. This allows the generation of 37 unique P(t) code phases (identified in Table 3-I) using the same basic code generator.

The linear $G_i(t)$ pattern (C/A-code) is the modulo-2 sum of two 1023-bit linear patterns, G1 and $G2_i$. The latter sequence is selectively delayed by an integer number of chips to produce many different G(t) patterns (defined in Table 3-I).

The $C_{M,i}(t)$ pattern (L2 CM-code) is a linear pattern which is reset with a specified initial state every code count of 10230 chips. Different initial states are used to generate different $C_{M,i}(t)$ patterns (defined in Table 3-II).

The $C_{L,i}(t)$ pattern (L2 CL-code) is also a linear pattern but with a longer reset period of 767250 chips. Different initial states are used to generate different $C_{L,i}(t)$ patterns (defined in Table 3-II).

For a given SV-ID, two different initial states are used to generate different $C_{L,i}(t)$ and $C_{M,i}(t)$ patterns.

Section 6.3.5 provides a selected subset of additional P-, L2 CM-, L2 CL-, and the C/A-code sequences with assigned PRN numbers.

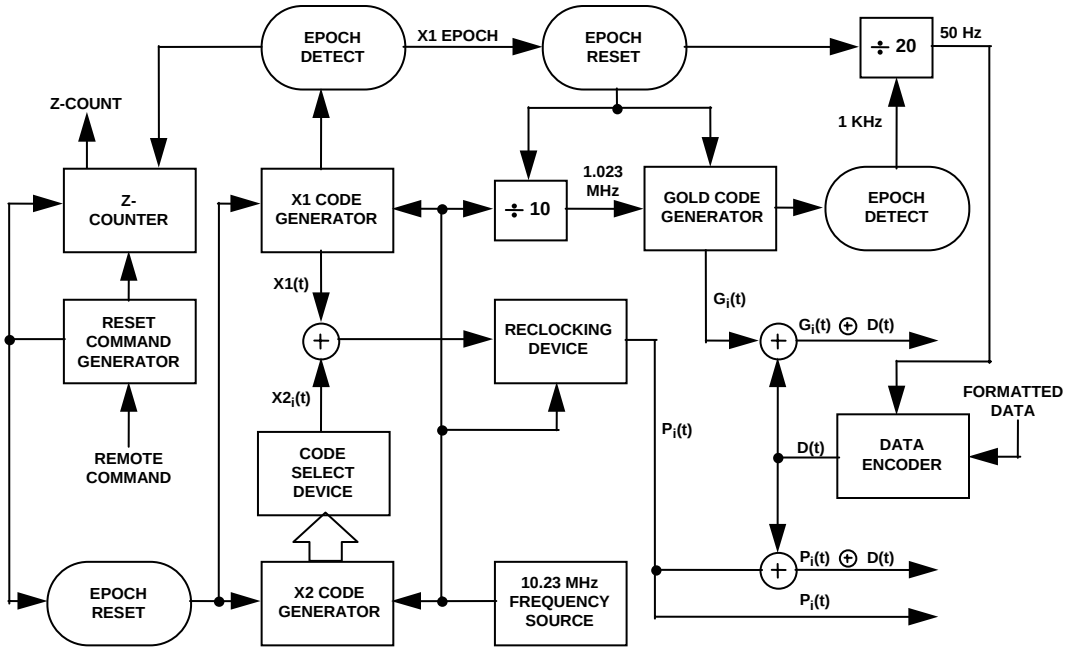

Figure 3-1. Generation of P-, C/A-Codes and Modulating Signals

3.3.2.2 P-Code Generation. Each $P_i(t)$ pattern is the modulo-2 sum of two extended patterns clocked at 10.23 Mbps (X1 and $X2_i$). X1 itself is generated by the modulo-2 sum of the output of two 12-stage registers (X1A and X1B) short cycled to 4092 and 4093 chips respectively. When the X1A short cycles are counted to 3750, the X1 epoch is generated. The X1 epoch occurs every 1.5 seconds after 15,345,000 chips of the X1 pattern have been generated. The polynomials for X1A and X1B, as referenced to the shift register input, are:

X1A: $1 + X^6 + X^8 + X^{11} + X^{12}$, and

X1B: $1 + X^1 + X^2 + X^5 + X^8 + X^9 + X^{10} + X^{11} + X^{12}$.

Samples of the relationship between shift register taps and the exponents of the corresponding polynomial, referenced to the shift register input, are as shown in Figures 3-2, 3-3, 3-4 and 3-5.

The state of each generator can be expressed as a code vector word which specifies the binary sequence constant of each register as follows: (a) the vector consists of the binary state of each stage of the register, (b) the stage 12 value appears at the left followed by the values of the remaining states in order of descending stage numbers, and (c) the shift direction is from lower to higher stage number with stage 12 providing the current output. This code vector convention represents the present output and 11 future outputs in sequence. Using this convention, at each X1 epoch, the X1A shift register is initialized to code vector 001001001000 and the X1B shift register is initialized to code vector 010101010100. The first chip of the X1A sequence and the first chip of the X1B sequence occur simultaneously in the first chip interval of any X1 period.

The natural 4095 chip cycles of these generating sequences are shortened to cause precession of the X1B sequence with respect to the X1A sequence during subsequent cycles of the X1A sequence in the X1 period. Re-initialization of the X1A shift register produces a 4092 chip sequence by omitting the last 3 chips (001) of the natural 4095 chip X1A sequence. Re-initialization of the X1B shift register produces a 4093 chip sequence by omitting the last 2 chips (01) of the natural 4095 chip X1B sequence. This results in the phase of the X1B sequence lagging by one chip for each X1A cycle in the X1 period.

The X1 period is defined as the 3750 X1A cycles (15,345,000 chips) which is not an integer number of X1B cycles. To accommodate this situation, the X1B shift register is held in the final state (chip 4093) of its 3749th cycle. It remains in this state until the X1A shift register completes its 3750th cycle (343 additional chips). The completion of the 3750th X1A cycle establishes the next X1 epoch which re-initializes both the X1A and X1B shift registers starting a new X1 cycle.

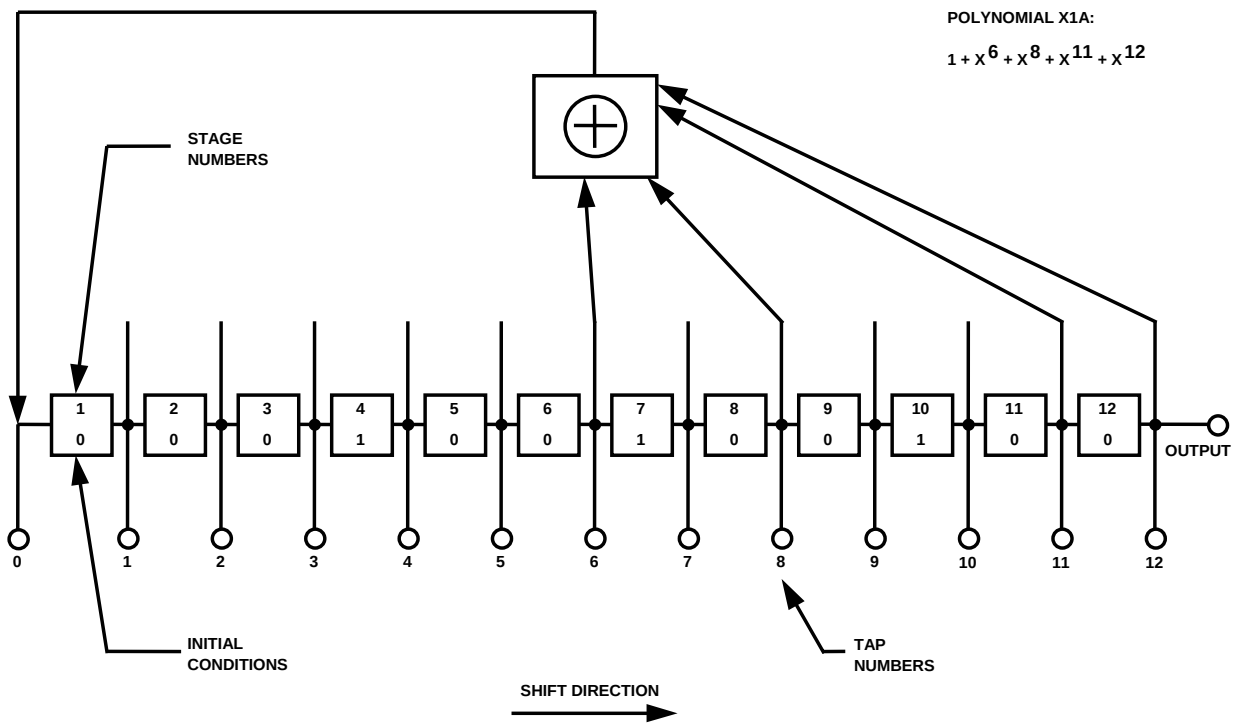

Figure 3-2. X1A Shift Register Generator Configuration

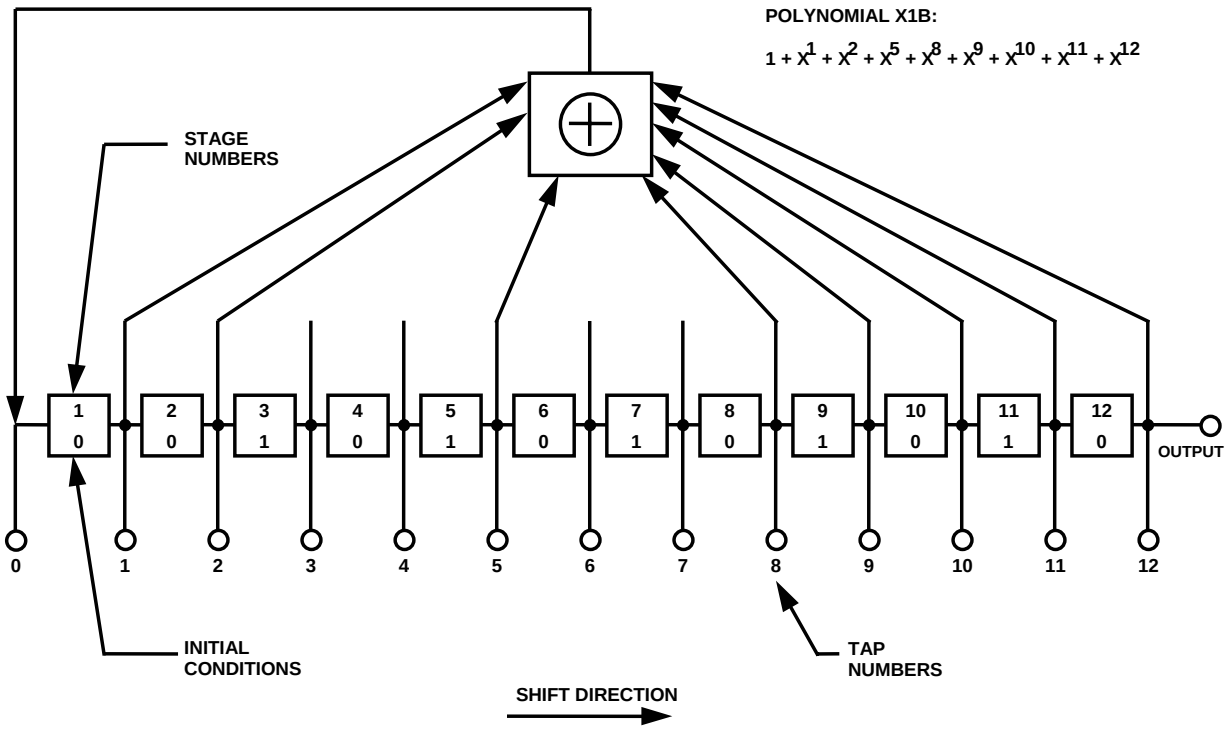

Figure 3-3. X1B Shift Register Generator Configuration

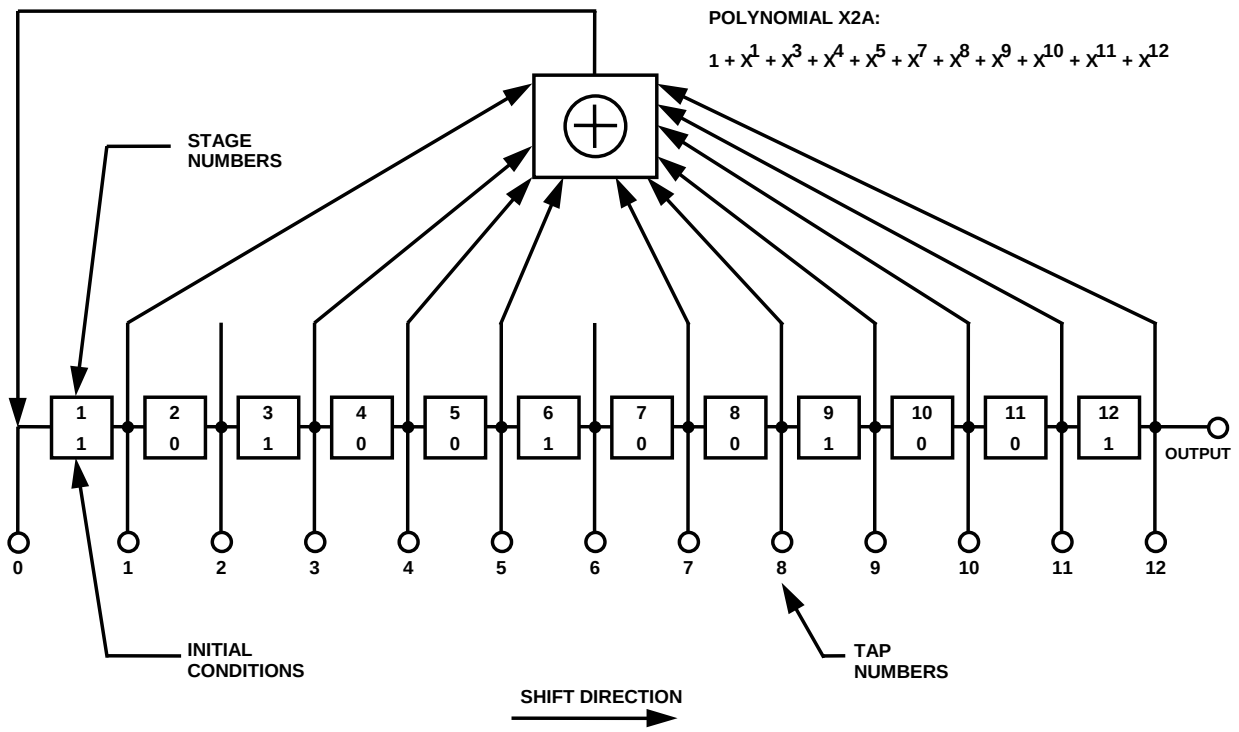

Figure 3-4. X2A Shift Register Generator Configuration

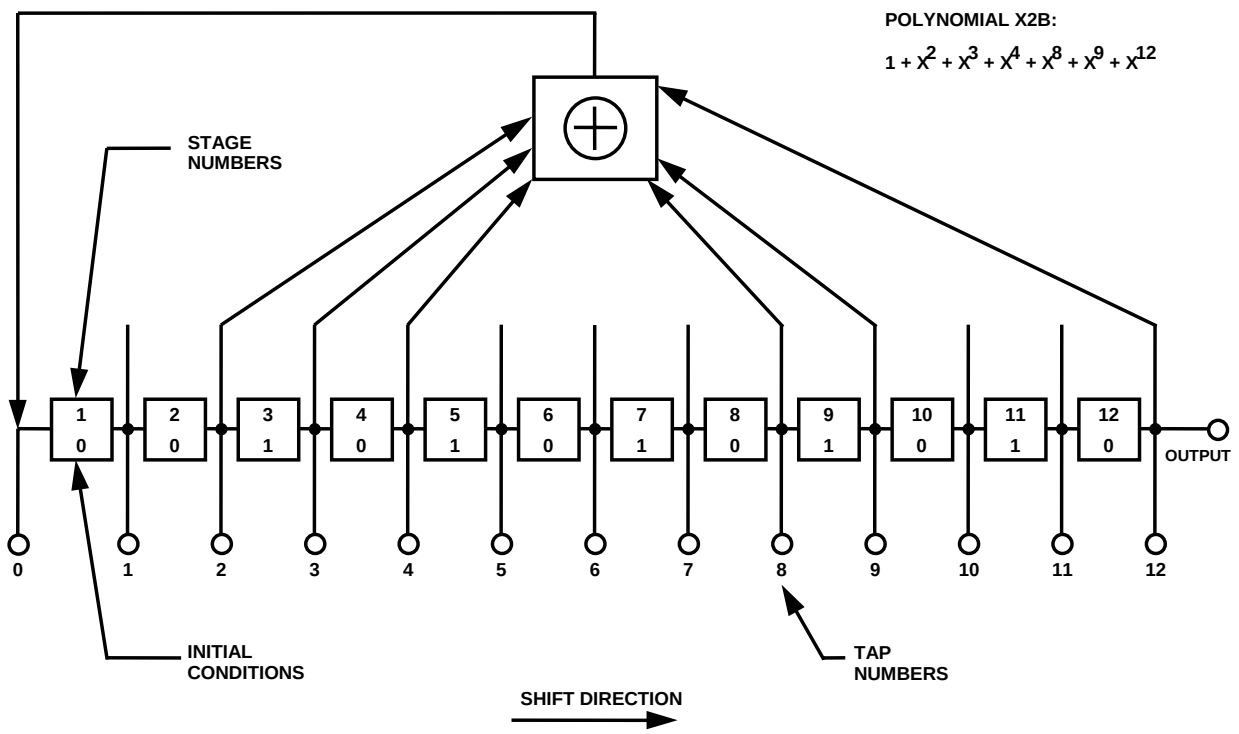

Figure 3-5. X2B Shift Register Generator Configuration

The $X2_i$ sequences are generated by first producing an X2 sequence and then delaying it by a selected integer number of chips, i, ranging from 1 to 37. Each of the $X2_i$ sequences is then modulo-2 added to the X1 sequence thereby producing up to 37 unique P(t) sequences.

The X2A and X2B shift registers, used to generate X2, operate in a similar manner to the X1A and X1B shift registers. They are short-cycled, X2A to 4092 and X2B to 4093, so that they have the same relative precession rate as the X1 shift registers. X2A epochs are counted to include 3750 cycles and X2B is held in the last state at 3749 cycle until X2A completes its 3750th cycle. The polynomials for X2A and X2B, as referenced to the shift register input, are:

X2A: $1 + X^1 + X^3 + X^4 + X^5 + X^7 + X^8 + X^9 + X^{10} + X^{11} + X^{12}$, and
X2B: $1 + X^2 + X^3 + X^4 + X^8 + X^9 + X^{12}$.

(The initialization vector for X2A is 100100100101 and for X2B is 010101010100).

The X2A and X2B epochs are made to precess with respect to the X1A and X1B epochs by causing the X2 period to be 37 chips longer than the X1 period. When the X2A is in the last state of its 3750th cycle and X2B is in the last state of its 3749th cycle, their transitions to their respective initial states are delayed by 37 chip time durations.

At the beginning of the GPS week, X1A, X1B, X2A and X2B shift registers are initialized to produce the first chip of the week. The precession of the shift registers with respect to X1A continues until the last X1A period of the GPS week interval. During this particular X1A period, X1B, X2A and X2B are held when reaching the last state of their respective cycles until that X1A cycle is completed (see Table 3-VI). At this point, all four shift registers are initialized and provide the first chip of the new week.

Figure 3-6 shows a functional P-code mechanization. Signal component timing is shown in Figure 3-7, while the end-of-week reset timing and the final code vector states are given in Tables 3-VI and 3-VII, respectively.

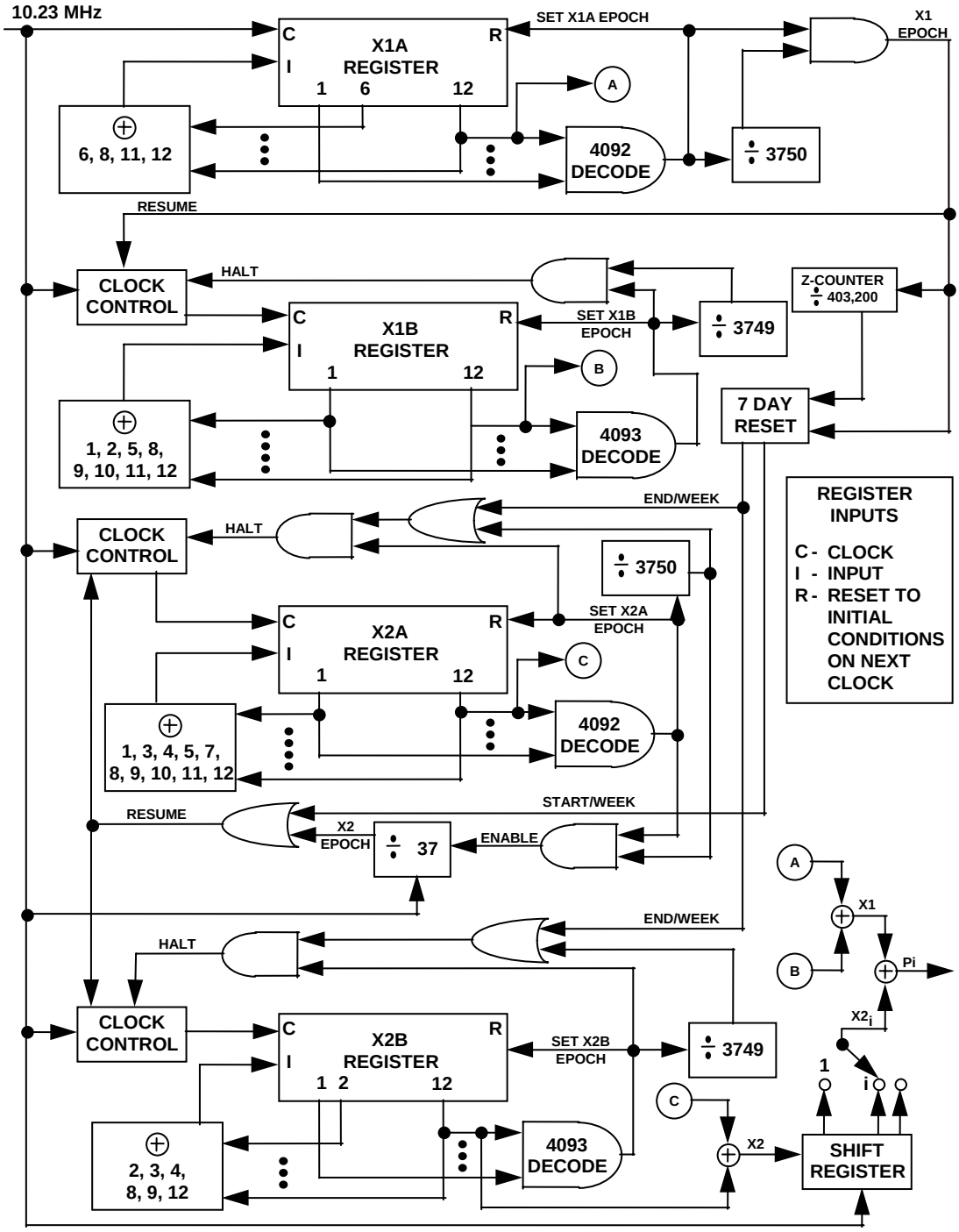

Figure 3-6. P-Code Generation

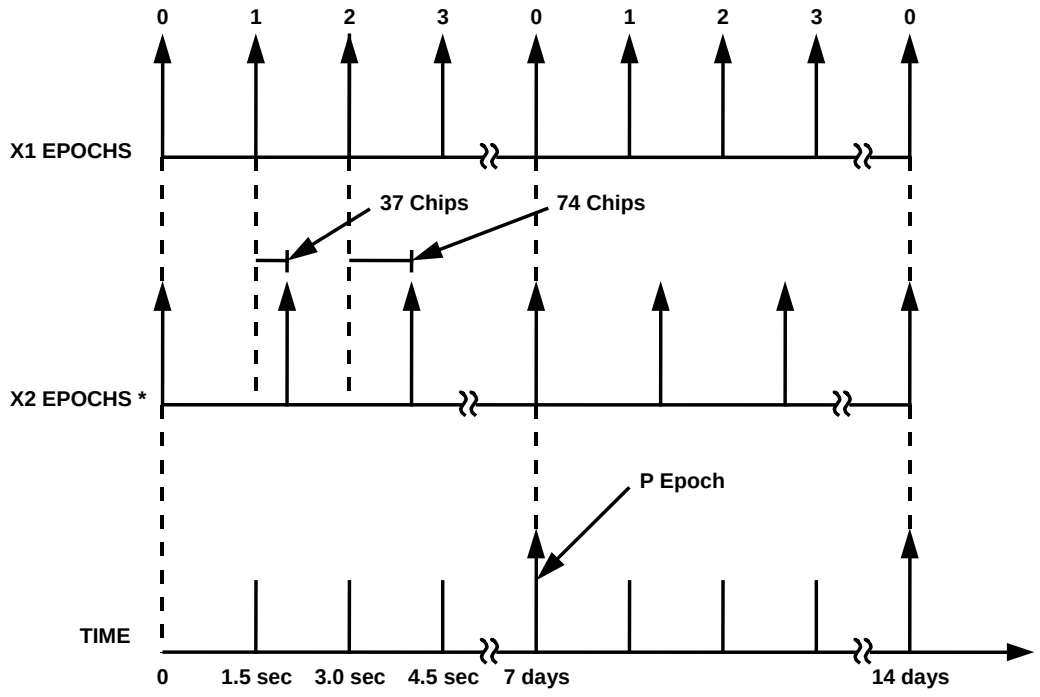

* Does not include any offset due to PRN delay.

Figure 3-7. P-Code Signal Component Timing

Table 3-VI. P-Code Reset Timing

(Last 400 μsec of 7-day period) **

	Code Chip			
	X1A-Code	X1B-Code	X2A-Code	X2B-Code
TIME ↓	1	345	1070	967
	•	•	•	•
	•	•	•	•
	•	•	•	•
	3023	3367	4092	3989
	•	•	•	•
	•	•	•	•
	•	•	•	•
	3127	3471	4092	4093
	•	•	•	•
	•	•	•	•
	•	•	•	•
	3749	4093	4092	4093
	•	•	•	•
	•	•	•	•
	•	•	•	•
	4092*	4093	4092	4093

* Last Chip of Week.

** Does not include any X2 offset due to PRN delay.

Table 3-VII. Final Code Vector States			
Code	Chip Number	Vector State	Vector State for 1st Chip following Epoch
X1A	4091	100010010010	001001001000
	4092	000100100100	
X1B	4092	100101010101	010101010100
	4093	001010101010	
X2A	4091	111001001001	100100100101
	4092	110010010010	
X2B	4092	000101010101	010101010100
	4093	001010101010	
NOTE: First Chip in each sequence is output bit whose leading edge occurs simultaneously with the epoch.			

3.3.2.3 C/A-Code Generation. Each $G_i(t)$ sequence is a 1023-bit Gold-code which is itself the modulo-2 sum of two 1023-bit linear patterns, G1 and $G2_i$. The $G2_i$ sequence is formed by effectively delaying the G2 sequence by an integer number of chips. The G1 and G2 sequences are generated by 10-stage shift registers having the following polynomials as referred to in the shift register input (see Figures 3-8 and 3-9).

$$G1 = X^{10} + X^3 + 1, \text{ and}$$
$$G2 = X^{10} + X^9 + X^8 + X^6 + X^3 + X^2 + 1.$$

The initialization vector for the G1 and G2 sequences is 1111111111. The G1 and G2 shift registers are initialized at the P-coder X1 epoch. The G1 and G2 registers are clocked at 1.023 MHz derived from the 10.23 MHz P-coder clock. The initialization by the X1 epoch phases the 1.023 MHz clock to insure that the first chip of the C/A code begins at the same time as the first chip of the P-code.

The effective delay of the G2 sequence to form the $G2_i$ sequence may be accomplished by combining the output of two stages of the G2 shift register by modulo-2 addition (see Figure 3-10). However, this two-tap coder implementation generates only a limited set of valid C/A codes. Table 3-I contains a tabulation of the G2 shift register taps selected and their corresponding P-code $X2_i$ and PRN signal numbers together with the first several chips of each resultant PRN code. Timing relationships related to the C/A code are shown in Figure 3-11.

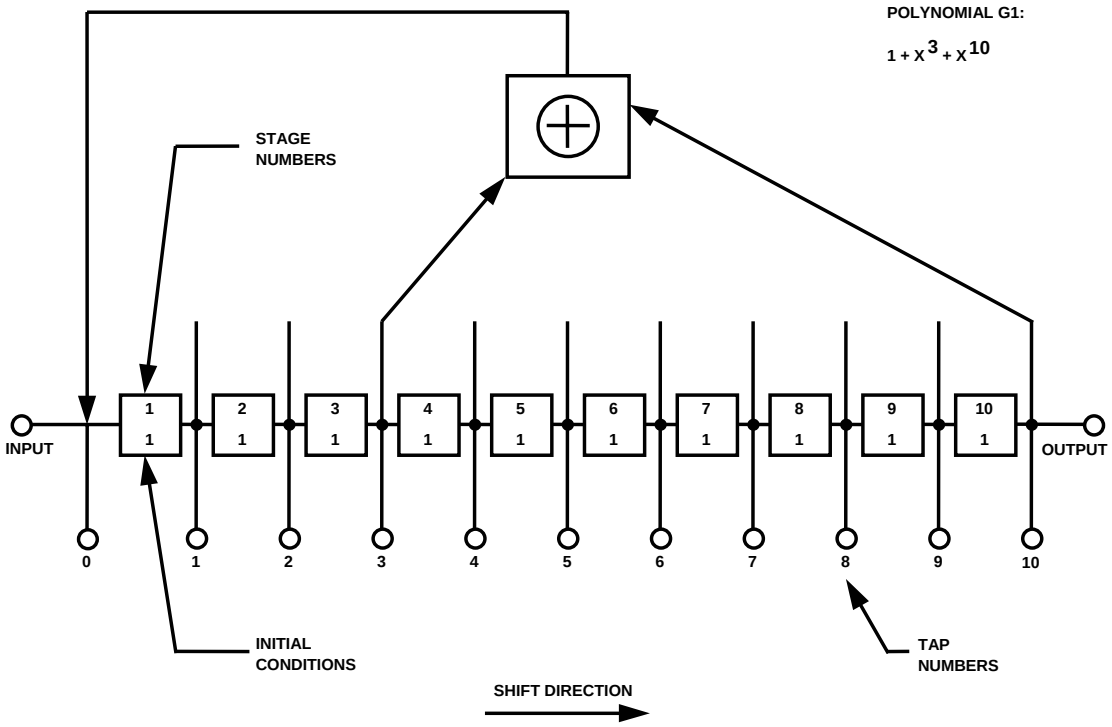

Figure 3-8. G1 Shift Register Generator Configuration

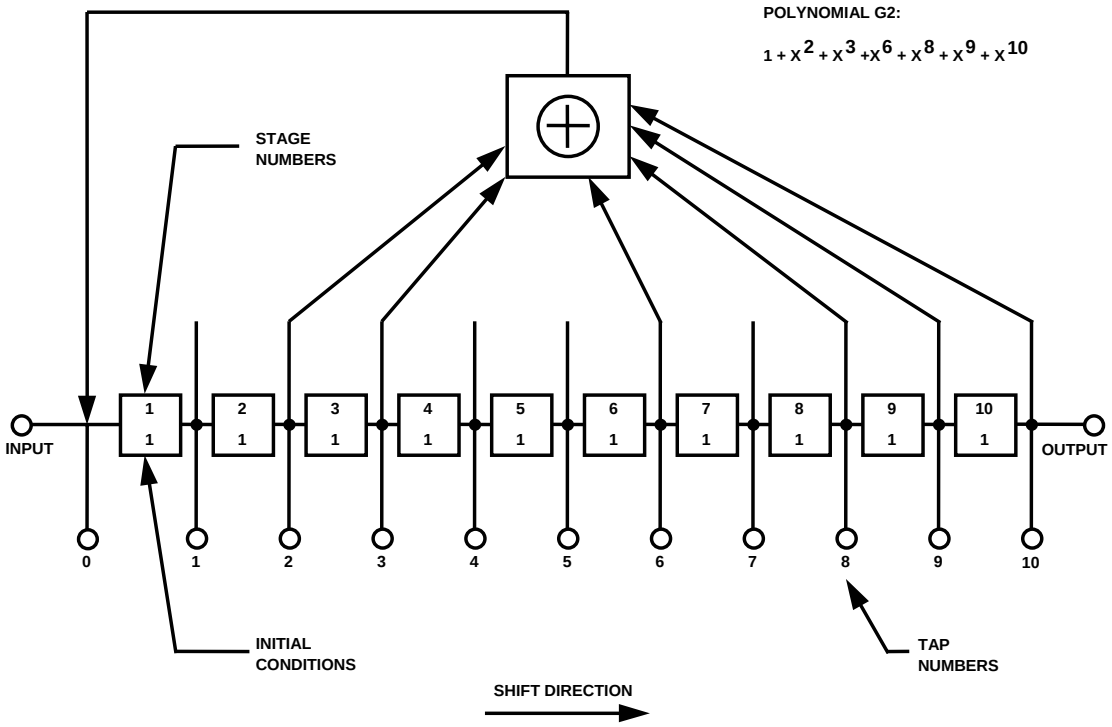

Figure 3-9. G2 Shift Register Generator Configuration

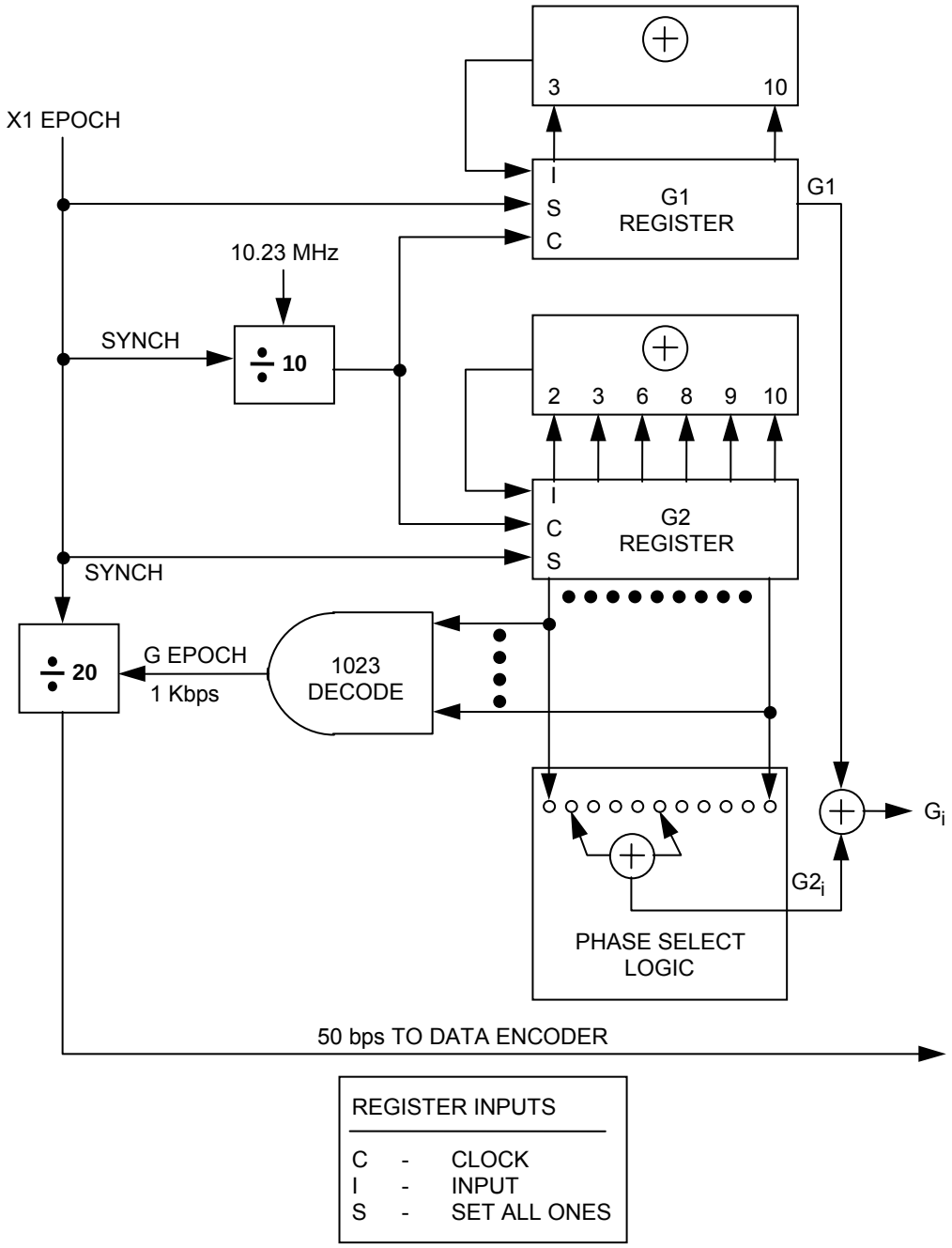

Figure 3-10. Example C/A-Code Generation

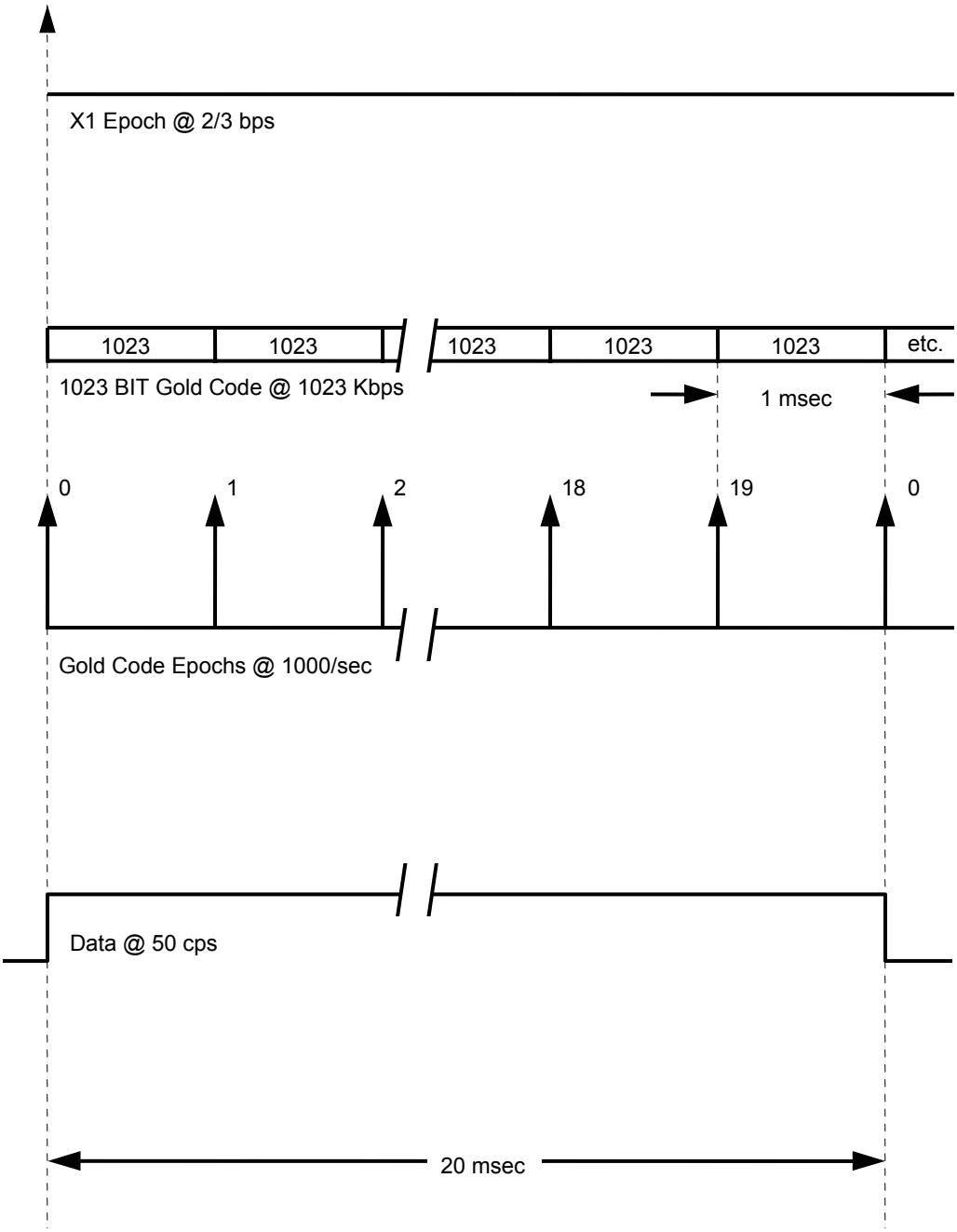

Figure 3-11. C/A-Code Timing Relationships

3.3.2.4 L2 CM-/L2 CL-Code Generation. Each $C_{M,i}(t)$ pattern (L2 CM-code) and $C_{L,i}(t)$ pattern (L2 CL-code) are generated using the same code generator polynomial each clocked at 511.5 Kbps. Each pattern is initiated and reset with a specified initial state (defined in Table 3-II). $C_{M,i}(t)$ pattern is reset after 10230 chips resulting in a code period of 20 milliseconds, and $C_{L,i}(t)$ pattern is reset after 767250 chips resulting in a code period of 1.5 seconds. The L2 CM and L2 CL shift registers are initialized at the P-coder X1 epoch. The first L2 CM-code chip starts synchronously with the end/start of week epoch. Timing relationships related to the L2 CM-/L2 CL-codes are shown in Figure 3-12.

The maximal polynomial used for L2 CM- and L2 CL-codes is 1112225171 (octal) of degree 27. The L2 CM and L2 CL code generator is conceptually described in Figure 3-13 using modular-type shift register generator.

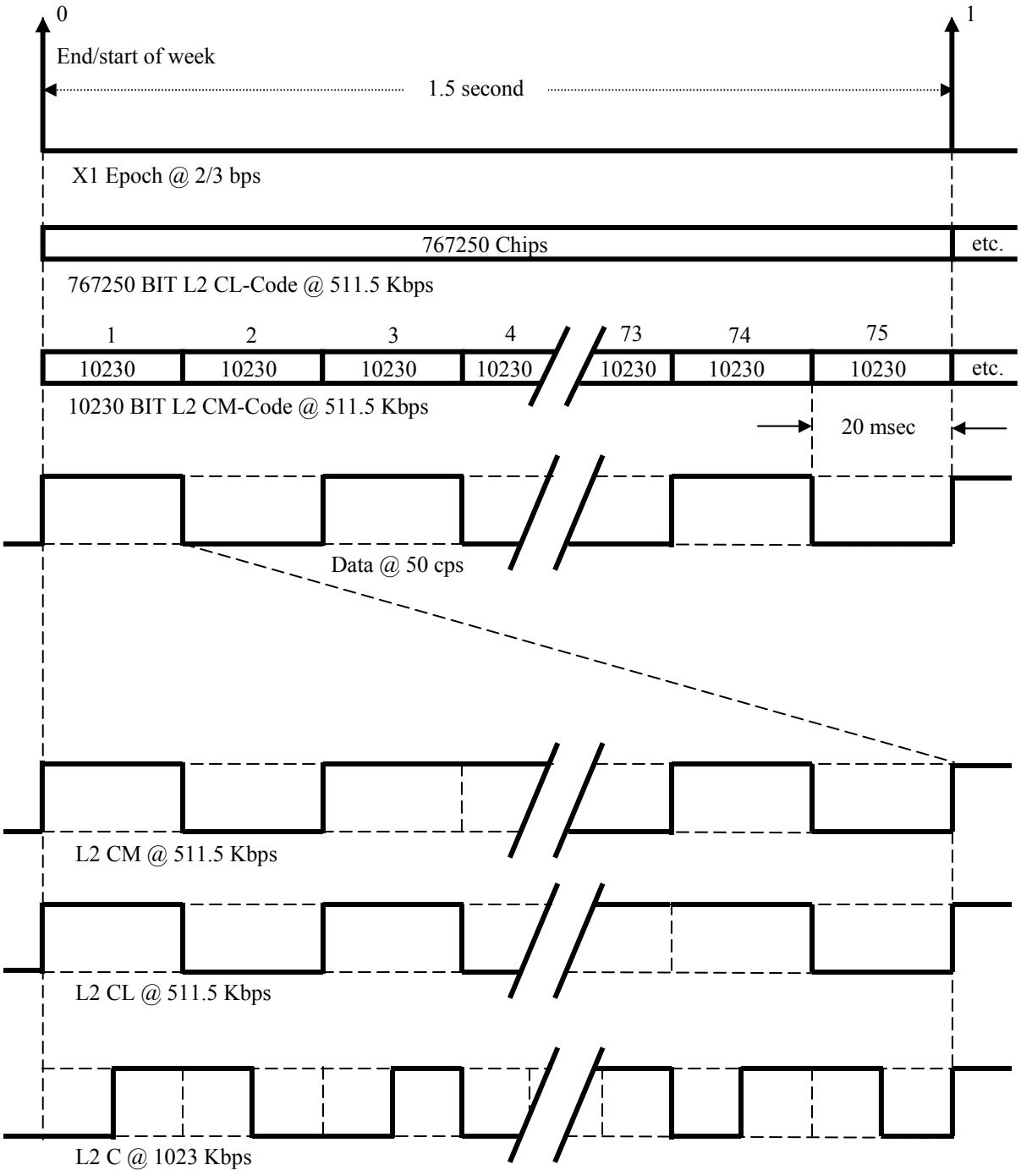

Figure 3-12. L2 CM-/L2 CL-Code Timing Relationships

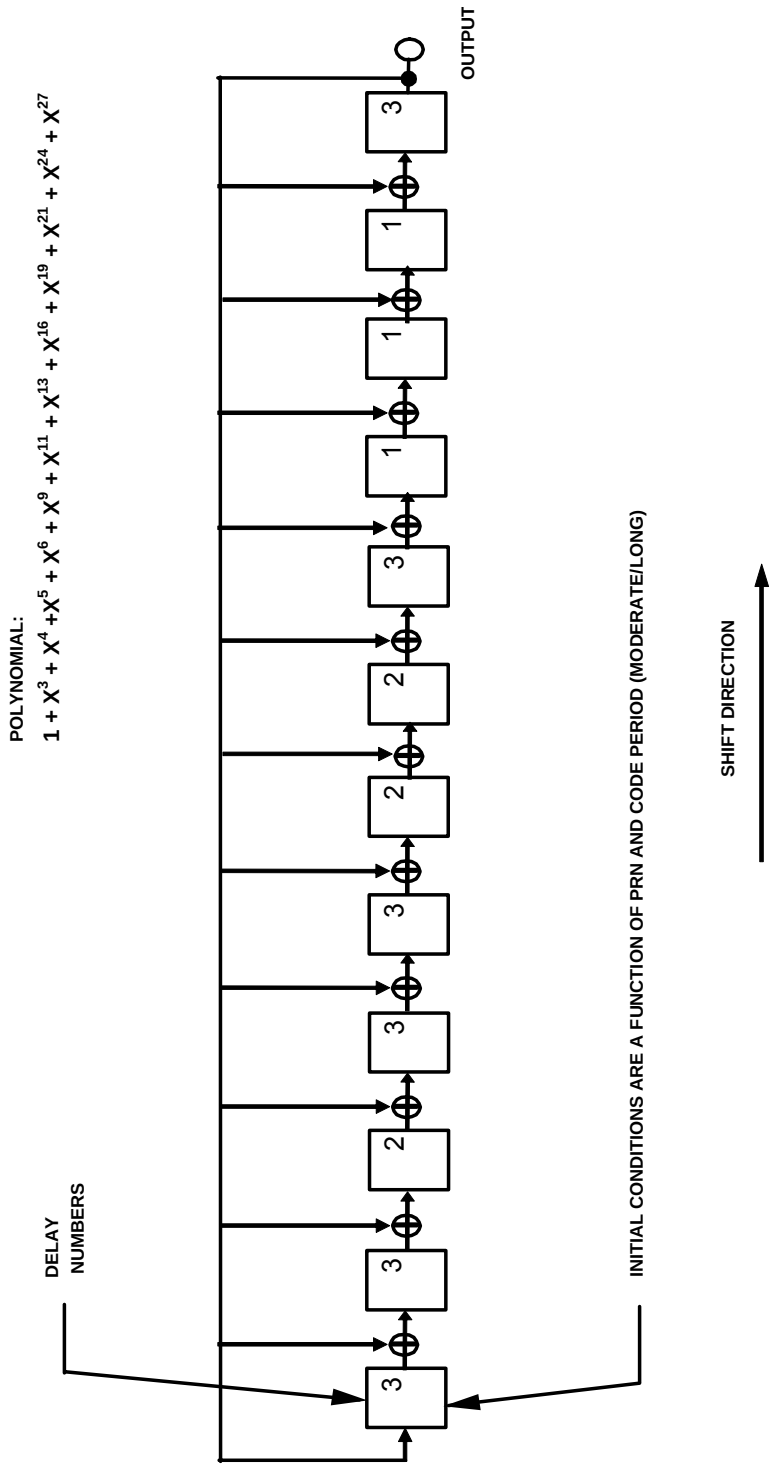

Figure 3-13. L2 CM/L2 CL Shift Register Generator Configuration

3.3.3 Navigation Data. The content and format of the NAV data, D(t), and the CNAV data, $D_C(t)$, are given in Appendices II and III, respectively, of this document.

3.3.3.1 Navigation Data Modulation (L2 CM). For Block IIR-M, Block IIF, and subsequent blocks of SVs, the CNAV bit train, $D_C(t)$, is rate ½ encoded and, thus, clocked at 50 sps. The resultant symbol sequence is then modulo-2 added to the L2 CM-code. During the initial period of Block IIR-M SVs operation, prior to Initial Operational Capability of L2 C signal, and upon ground command, the NAV bit train, D(t), at one of two data rates, may be modulo-2 added to the L2 CM-code instead of CNAV data, $D_C(t)$, as further described in Section 3.2.2.

3.3.3.1.1 Forward Error Correction. The CNAV bit train, $D_C(t)$, will always be Forward Error Correction (FEC) encoded by a rate 1/2 convolutional code. For Block IIR-M, the NAV bit train, D(t), can be selected to be convolutionally encoded. The resulting symbol rate is 50 sps. The convolutional coding will be constraint length 7, with a convolutional encoder logic arrangement as illustrated in Figure 3-14. The G1 symbol is selected on the output as the first half of a 40-millisecond data bit period.

Twelve-second navigation messages broadcast by the SV are synchronized with every eighth of the SV's P(Y)-code X1 epochs. However, the navigation message is FEC encoded in a continuous process independent of message boundaries (i.e. at the beginning of each new message, the encoder registers illustrated in Figure 3-14 contains the last six bits of the previous message).

Because the FEC encoding convolves successive messages, it is necessary to define which transmitted symbol is synchronized to SV time, as follows. The beginning of the first symbol that contains any information about the first bit of a message will be synchronized to every eighth X1 epoch (referenced to end/start of week). The users' convolutional decoders will introduce a fixed delay that depends on their respective algorithms (usually 5 constraint lengths, or 35 bits), for which they must compensate to determine system time from the received signal. This convolutional decoding delay and the various relationships with the start of the data block transmission and SV time are illustrated in Figure 3-15.

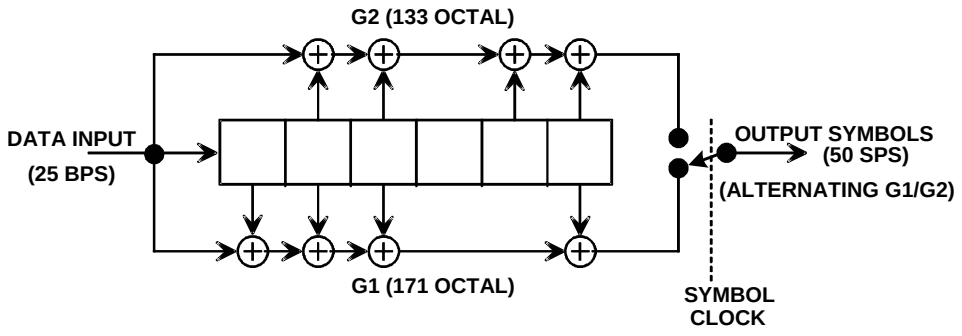

Figure 3-14. Convolutional Encoder

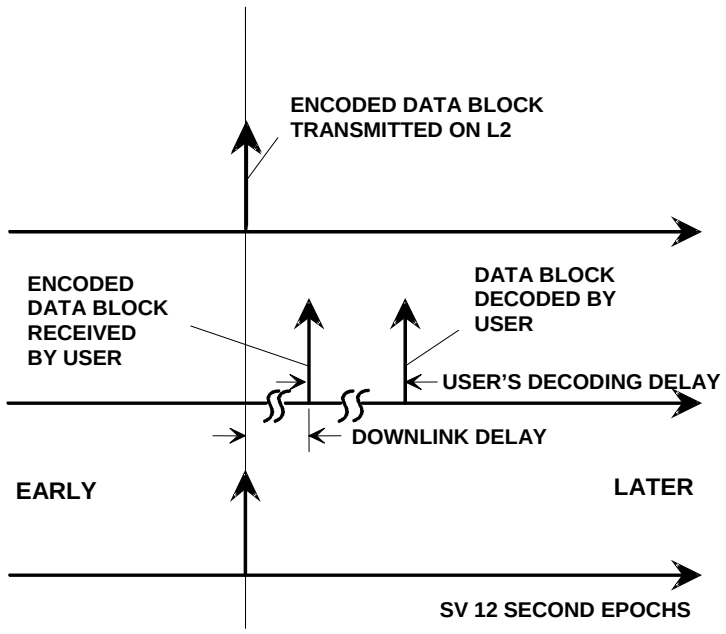

Figure 3-15. Convolutional Transmit/Decoding Timing Relationships

3.3.4 GPS Time and SV Z-Count. GPS time is established by the Control Segment and is referenced to Coordinated Universal Time (UTC) as maintained by the U.S. Naval Observatory (UTC(USNO)) zero time-point defined as midnight on the night of January 5, 1980/morning of January 6, 1980. The largest unit used in stating GPS time is one week defined as 604,800 seconds. GPS time may differ from UTC because GPS time shall be a continuous time scale, while UTC is corrected periodically with an integer number of leap seconds. There also is an inherent but bounded drift rate between the UTC and GPS time scales. The OCS shall control the GPS time scale to be within one microsecond of UTC (modulo one second).

The NAV data contains the requisite data for relating GPS time to UTC. The accuracy of this data during the transmission interval shall be such that it shall relate GPS time (maintained by the MCS of the CS) to UTC (USNO) within 90 nanoseconds (one sigma). This data is generated by the CS; therefore, the accuracy of this relationship may degrade if for some reason the CS is unable to upload data to a SV. At this point, it is assumed that alternate sources of UTC are no longer available, and the relative accuracy of the GPS/UTC relationship will be sufficient for users. Range error components (e.g. SV clock and position) contribute to the GPS time transfer error, and under normal operating circumstances (two frequency time transfers from SV(s) whose navigation message indicates a URA of eight meters or less), this corresponds to a 97 nanosecond (one sigma) apparent uncertainty at the SV. Propagation delay errors and receiver equipment biases unique to the user add to this time transfer uncertainty.

In each SV the X1 epochs of the P-code offer a convenient unit for precisely counting and communicating time. Time stated in this manner is referred to as Z-count, which is given as a 29-bit binary number consisting of two parts as follows:

a. The binary number represented by the 19 least significant bits of the Z-count is referred to as the time of week (TOW) count and is defined as being equal to the number of X1 epochs that have occurred since the transition from the previous week. The count is short-cycled such that the range of the TOW-count is from 0 to 403,199 X1 epochs (equaling one week) and is reset to zero at the end of each week. The TOW-count's zero state is defined as that X1 epoch which is coincident with the start of the present week. This epoch occurs at (approximately) midnight Saturday night-Sunday morning, where midnight is defined as 0000 hours on the UTC scale which is nominally referenced to the Greenwich Meridian. Over the years the occurrence of the "zero state epoch" may differ by a few seconds from 0000 hours on the UTC scale since UTC is periodically corrected with leap seconds while the TOW-count is continuous without such correction. To aid rapid ground lock-on to the P-code signal, a truncated version of the TOW-count, consisting of its 17 most significant bits, is contained in the hand-over word (HOW) of the L1 and L2 NAV data (D(t)) stream; the relationship between the actual TOW-count and its truncated HOW version is illustrated by Figure 3-16.

b. The ten most significant bits of the Z-count are a modulo 1024 binary representation of the sequential number assigned to the current GPS week (see paragraph 6.2.4). The range of this count is from 0 to 1023 with its zero state being defined as the GPS week number zero and every integer multiple of 1024 weeks, thereafter (i.e. 0, 1024, 2048, etc.).

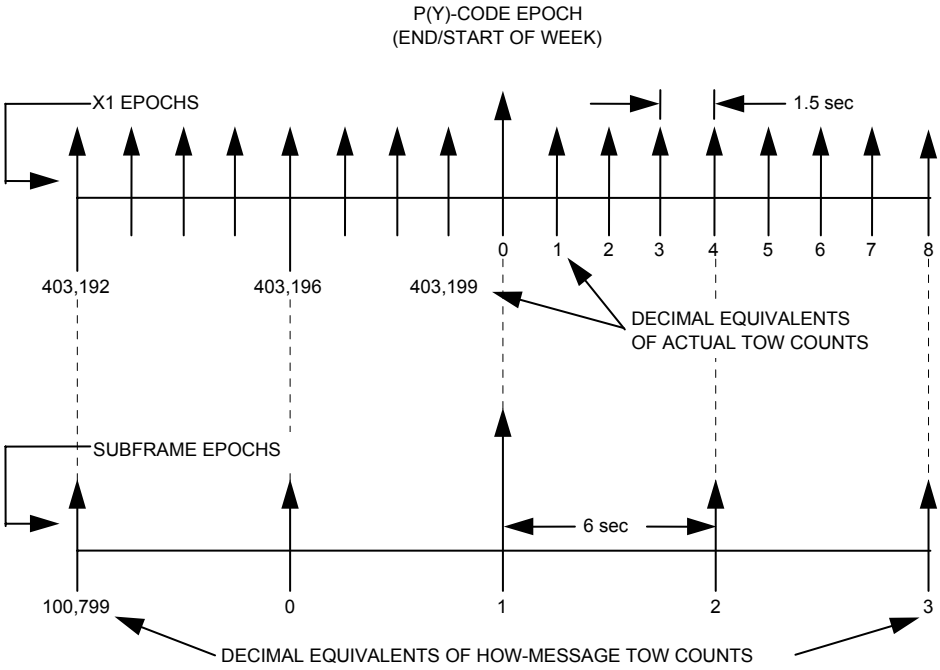

NOTES:

1. TO AID IN RAPID GROUND LOCK-ON THE HAND-OVER WORD (HOW) OF EACH SUBFRAME CONTAINS A TRUNCATED TIME-OF-WEEK (TOW) COUNT
2. THE HOW IS THE SECOND WORD IN EACH SUBFRAME (REFERENCE PARAGRAPH 20.3.3.2).
3. THE HOW-MESSAGE TOW COUNT CONSISTS OF THE 17 MSBs OF THE ACTUAL TOW COUNT AT THE START OF THE NEXT SUBFRAME.
4. TO CONVERT FROM THE HOW-MESSAGE TOW COUNT TO THE ACTUAL TOW COUNT AT THE START OF THE NEXT SUBFRAME, MULTIPLY BY FOUR.
5. THE FIRST SUBFRAME STARTS SYNCHRONOUSLY WITH THE END/START OF WEEK EPOCH.

Figure 3-16. Time Line Relationship of HOW Message

4. NOT APPLICABLE

(This page intentionally left blank.)

5. NOT APPLICABLE

(This page intentionally left blank.)

6. NOTES

6.1 Acronyms

AI	-	Availability Indicator
AODO	-	Age of Data Offset
A-S	-	Anti-Spoofing
Autonav	-	Autonomous Navigation
BPSK	-	Bi-Phase Shift Key
CDC	-	Clock Differential Correction
CNAV	-	Civil Navigation
cps	-	cycles per second
CRC	-	Cyclic Redundancy Check
CS	-	Control Segment
DC	-	Differential Correction
DN	-	Day Number
EAROM	-	Electrically Alterable Read-Only Memory
ECEF	-	Earth-Centered, Earth-Fixed
ECI	-	Earth-Centered, Inertial
EDC	-	Ephemeris Differential Correction
EOE	-	Edge-of-Earth
EOL	-	End of Life
ERD	-	Estimated Range Deviation
FEC	-	Forward Error Correction
GGTO	-	GPS/GNSS Time Offset
GNSS	-	Global Navigation Satellite System
GPS	-	Global Positioning System
HOW	-	Hand-Over Word
ICC	-	Interface Control Contractor
ID	-	Identification
IERS	-	International Earth Rotation and Reference Systems Service

IODC	-	Issue of Data, Clock
IODE	-	Issue of Data, Ephemeris
IRM	-	IERS Reference Meridian
IRP	-	IERS Reference Pole
IS	-	Interface Specification
ISC	-	Inter-Signal Correction
LSB	-	Least Significant Bit
LSF	-	Leap Seconds Future
L2 C	-	L2 Civil Signal
L2 CL	-	L2 Civil-Long Code
L2 CM	-	L2 Civil-Moderate Code
MCS	-	Master Control Station
MSB	-	Most Significant Bit
NAV	-	Navigation
NDUS	-	Nudet Detection User Segment
NMCT	-	Navigation Message Correction Table
NSC	-	Non-Standard C/A-Code
NSCL	-	Non-Standard L2 CL-Code
NSCM	-	Non-Standard L2 CM-Code
NSY	-	Non-Standard Y-code
OBCP	-	On-Board Computer Program
OCS	-	Operational Control System
PRN	-	Pseudo-Random Noise
RF	-	Radio Frequency
RMS	-	Root Mean Square
SA	-	Selective Availability
SEP	-	Spherical Error Probable
sps	-	symbols per second

SS	-	Space Segment
SV	-	Space Vehicle
SVN	-	Space Vehicle Number
TBD	-	To Be Determined
TBS	-	To Be Supplied
TLM	-	Telemetry
TOW	-	Time Of Week
UE	-	User Equipment
URA	-	User Range Accuracy
URE	-	User Range Error
US	-	User Segment
USNO	-	U.S. Naval Observatory
UTC	-	Coordinated Universal Time
WGS 84	-	World Geodetic System 1984
WN	-	Week Number
WN_e	-	Extended Week Number

(This page intentionally left blank.)

6.2 Definitions

6.2.1 User Range Accuracy. User range accuracy (URA) is a statistical indicator of the ranging accuracies obtainable with a specific SV. URA is a one-sigma estimate of the user range errors in the navigation data for the transmitting satellite. It includes all errors for which the Space and Control Segments are responsible. It does not include any errors introduced in the user set or the transmission media. While the URA may vary over a given subframe fit interval, the URA index (N) reported in the NAV message corresponds to the maximum value of URA anticipated over the fit interval.

6.2.2 SV Block Definitions. The following block definitions are given to facilitate discussion regarding the capability of the various blocks of GPS satellites to support the SV-to-US interface.

6.2.2.1 Developmental SVs. The original concept validation satellites developed by Rockwell International and designated as satellite vehicle numbers (SVNs) 1-11 are termed "Block I" SVs. These SVs were designed to provide 3-4 days of positioning service without contact from the CS. These SVs transmitted a configuration code of 000 (reference paragraph 20.3.3.5.1.4). There are no longer any active Block I SVs in the GPS constellation. The last Block I SV was decommissioned in 1995.

6.2.2.2 Operational SVs. The operational satellites are designated Block II, Block IIA, Block IIR, Block IIR-M and Block IIF SVs. Characteristics of these SVs are provided below. Modes of operation for these SVs and accuracy of positioning services provided are described in paragraphs 6.3.2 through 6.3.4. These SVs transmit configuration codes as specified in paragraph 20.3.3.5.1.4. The navigation signal provides no direct indication of the type of the transmitting SV.

6.2.2.2.1 Block II SVs. The first block of full scale operational SVs developed by Rockwell International are designated as SVNs 13-21 and are termed "Block II" SVs. These SVs were designed to provide 14 days of positioning service without contact from the CS.

6.2.2.2.2 Block IIA SVs. The second block of full scale operational SVs developed by Rockwell International are designated as SVNs 22-40 and are termed "Block IIA" SVs. These SVs are capable of providing 60 days of positioning service without contact from the CS.

6.2.2.2.3 Block IIR SVs. The block of operational replenishment SVs developed by Lockheed Martin are designated as SVNs 41-61 and are termed "Block IIR" SVs. These SVs have the capability of storing at least 60 days of navigation data with current memory margins, while operating in a IIA mode, to provide positioning service without contact from the CS for that period. (Contractual requirements for these SVs specify transmission of correct data for only 14 days to support short-term extended operations while in IIA mode.) The IIR SV will provide a minimum of 60 days of positioning service without contact from the CS when operating in autonomous navigation (Autonav) mode.

6.2.2.2.4 Block IIR-M SVs. The subset of operational replenishment SVs developed by Lockheed Martin which are “Modernized” configuration of “Block IIR” SVs are termed “Block IIR-M”.

6.2.2.2.5 Block IIF SVs. The block of operational replenishment SVs developed by Boeing are designated as SVNs 62-73 and are termed “Block IIF” SVs. This is the first block of operational SVs that transmit the L5 Civil signal. These SVs will provide at least 60 days of positioning service without contact from the CS.

6.2.3 Operational Interval Definitions. The following three operational intervals have been defined. These labels will be used to refer to differences in the interface definition as time progresses from SV acceptance of the last navigation data upload.

6.2.3.1 Normal Operations. The SV is undergoing normal operations whenever the fit interval flag (reference paragraph 20.3.3.4.3.1) is zero.

6.2.3.2 Short-term Extended Operations. The SV is undergoing short-term extended operations whenever the fit interval flag is one and the IODE (reference paragraph 20.3.4.4) is less than 240.

6.2.3.3 Long-term Extended Operations. The SV is undergoing long-term extended operations whenever the fit interval flag is one and the IODE is in the range 240-255.

6.2.4 GPS Week Number. The GPS week numbering system is established with week number zero (0) being defined as that week which started with the X1 epoch occurring at midnight UTC(USNO) on the night of January 5, 1980/ morning of January 6, 1980. The GPS week number continuously increments by one (1) at each end/start of week epoch without ever resetting to zero. Users must recognize that the week number information contained in the Nav Message may not necessarily reflect the current full GPS week number (see paragraphs 20.3.3.3.1.1, 20.3.3.5.1.5, 20.3.3.5.2.4, and 30.3.3.1.1.1).

6.2.5 L5 Civil Signal. L5 is the GPS downlink signal at a nominal carrier frequency of 1176.45 MHz. The L5 signal is only available on Block IIF and subsequent blocks of SVs and the signal is specified/described in a separate and different interface control document.

6.3 Supporting Material

6.3.1 Received Signals. The guaranteed minimum user-received signal levels are defined in paragraph 3.3.1.6. As additional supporting material, Figure 6-1 illustrates an example variation in the minimum received power of the near-ground user-received L1 and L2 signals from Block II/IIA/IIR SVs as a function of SV elevation angle.

Higher received signals levels can be caused by such factors as SV attitude errors, mechanical antenna alignment errors, transmitter power output variations due to temperature variations, voltage variations and power amplifier variations, and due to a variability in link atmospheric path loss. For Block II/IIA and IIR SVs, the maximum received signal levels as a result of these factors is not expected to exceed -155.5 dBW and -153.0 dBW, respectively, for the P(Y) and C/A components of the L1 channel, nor -158.0 dBW for either signal on the L2 channel. For Block IIR-M and IIF SVs, the maximum received signal levels as a result of these factors is not expected to exceed -155.5 dBW and -153.0 dBW, respectively, for the P(Y) and C/A components of the L1 channel and L2 channel. In addition, due to programmable power output capabilities of Block IIR-M and IIF SVs, under certain operational scenarios, individual signal components of Block IIR-M/IIF SVs may exceed the previously stated maximum but are not expected to exceed -150 dBW.

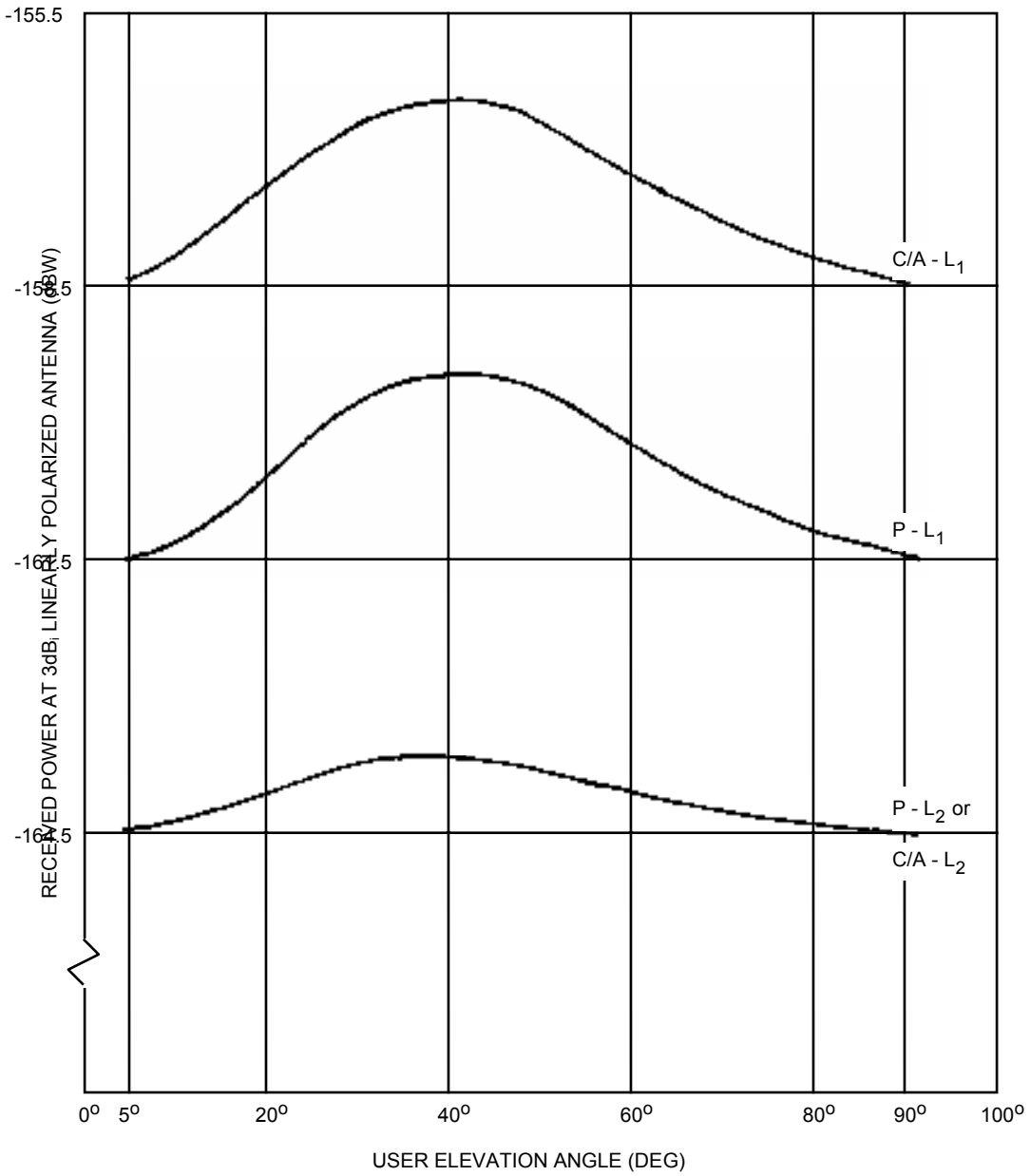

Figure 6-1. User Received Minimum Signal Level Variations (Example, Block II/IIA/IIR)

6.3.2 Extended Navigation Mode (Block II/IIA). The Block II and IIA SVs are capable of being uploaded by the CS with a minimum of 60 days of navigation data to support a 60 day positioning service. Due to memory retention limitations, the Block II SVs may not transmit correct data for the entire 60 days but are guaranteed to transmit correct data for at least 14 days to support short-term extended operations. Under normal conditions the CS will provide daily uploads to each SV, which will allow the SV to maintain normal operations as defined in paragraph 6.2.3.1 and described within this IS. During normal operations, the SVs will have a user range error that is at or below a level required to support a positioning accuracy of 16 meters spherical error probable (SEP). In addition, the almanac data, UTC parameters and ionospheric data will be maintained current to meet the accuracy specified in this IS.

If the CS is unable to upload the SVs (the CS is unavailable or the SV is unable to accept and process the upload), each SV will individually transition to short-term extended operations and eventually to long-term extended operations (based on time from each SV's last upload) as defined in paragraphs 6.2.3.2 and 6.2.3.3, and as further described throughout this IS. As time from upload continues through these three operational intervals, the user range error of the SV will increase, causing a positioning service accuracy degradation. The rate of accuracy degradation is slow over the short-term extended operations interval, such that at the end of this interval (approximately 14 days after upload) the US will be able to achieve a positioning accuracy of 425 meters SEP. The rate of accuracy degradation increases in the long-term extended interval, such that by the 180th day after the last upload, the positioning errors will have grown to 10 kilometers SEP. During these intervals the URA will continue to provide the proper estimate of the user range errors.

During short-term and long-term extended operations (approximately day 2 through day 62 after an upload), the almanac data, UTC parameters and ionospheric data will not be maintained current and will degrade in accuracy from the time of last upload.

6.3.3 Block IIA Mode (Block IIR/IIR-M). The Block IIR/IIR-M SVs, when operating in the Block IIA mode, will perform similarly to the Block IIA SVs and have the capability of storing at least 60 days of navigation data, with current memory margins, to provide positioning service without contact from the CS for that period (through short-term and long-term extended operations). (Contractual requirements for these SVs specify transmission of correct data for only 14 days to support short-term extended operations while in IIA mode.) Under normal conditions, the CS will provide daily uploads to each SV, which will allow the SV to maintain normal operations as defined in paragraph 6.2.3.1 and described within this IS.

If the CS is unable to upload the SVs (the CS is unavailable or the SV is unable to accept and process the upload), each SV will individually transition to short-term extended operations and eventually to long-term extended operations (based on time from each SV's last upload) as defined in paragraph 6.2.3.2 and 6.2.3.3, and as further described throughout this IS. As time from upload continues through these three operational intervals, the user range error (URE) of the SV will increase, causing a positioning service accuracy degradation.

6.3.4 Autonomous Navigation Mode. The Block IIR/IIR-M and Block IIF SV, in conjunction with a sufficient number of other Block IIR/IIR-M or Block IIF SVs, operates in an Autonav mode when commanded by the CS. Each Block IIR/IIR-M/IIF SV in the constellation determines its own ephemeris and clock correction parameters via SV-to-SV ranging, communication of data, and on-board data processing which updates data uploaded by the CS. In the Autonav mode the Block IIR/IIR-M/IIF SV will maintain normal operations as defined in paragraph 6.2.3.1 and as further described within this IS, and will have a URE of no larger than 6 meters, one sigma for Block IIR/IIR-M. URE of 6 meters, one sigma, is expected to support 16 meter SEP accuracy under a nominal position dilution of precision. If the CS is unable to upload the SVs, the Block IIR/IIR-M/IIF SVs will maintain normal operations for period of at least 60 days after the last upload.

In the Autonav mode, the almanac data, UTC parameters and ionospheric data are still calculated and maintained current by the CS and uploaded to the SV as required. If the CS is unable to upload the SVs, the almanac data, UTC parameters and ionospheric data will not be maintained current and will degrade in accuracy from the time of the last upload.

6.3.5 PRN Code sequences expansion. The additional PRN sequences provided in this section are for information only. The additional PRN sequences identified in this section are not applicable to Block II/IIA, IIR/IIR-M, IIF SVs. In addition, the current valid range for GPS PRN signal number for C/A- and P-code is 1 – 37 as specified in Table 3-I. The PRN sequences provided in this section are for other L1/L2 signal applications, such as Satellite Based Augmentation System (SBAS) satellite signals, and potential use in the future by GPS.

6.3.5.1 Additional C/A-code PRN sequences. The PRN C/A-code is described in Section 3.2.1.3 and 36 legacy C/A-code sequences are assigned by SV-ID number in Table 3-I. An additional set of 173 C/A-code PRN sequences are selected and assigned with PRN numbers in this section as shown in Table 6-I. Among the 173 additional sequences; PRN numbers 38 through 63 are reserved for future GPS SVs; PRN numbers 64 through 119 are reserved for future Ground Based Augmentation System (GBAS) and other augmentation systems; PRN numbers 120 through 158 are reserved for SBAS; and PRN numbers 159 through 210 are reserved for other Global Navigation Satellite System (GNSS) applications. For GPS application, the CNAV data, $D_c(t)$, will be modulo-2 added to the C/A-code sequences of PRN numbers 38 through 63. Any assignment of a C/A-code PRN number and its code sequence for any additional SV and/or other L1/L2 signal applications, such as SBAS satellite signals, will be selected from the sequences of Table 6-I and will be approved, controlled, and managed by the GPS JPO.

It should be noted that, in Table 6-I, the C/A-code sequences are identified by "G2 Delay" and "Initial G2 Setting" which is not as same as the method used in Table 3-I. The two-tap coder implementation method referenced and used in Table 3-I is not used in Table 6-I due to its limitation in generating C/A-code sequences. The "G2 Delay" specified in Table 6-I may be accomplished by using the "Initial G2 Setting" as the initialization vector for the G2 shift register of Figure 3-9.

6.3.5.2 Additional P-Code PRN sequences. The PRN P-code set of 37 mutually exclusive sequences are described in Section 3.2.1.1, and assignment of these code segments by SV-ID number is given in Table 3-I. An additional set of 173 P-code PRN sequences are described in this section. Among the 173 additional sequences; PRN numbers 38 through 63 are reserved for future GPS SVs; PRN numbers 64 through 119 are reserved for future GBAS and other augmentation systems; and PRN numbers 120 through 210 are reserved for other future applications. For GPS application, the CNAV data, $D_c(t)$, which may include additional future military message types, will be modulo-2 added to the P-code sequences of PRN numbers 38 through 63. The P-code PRN numbers and their code sequences defined in Table 6-I are not for general use and will be approved, controlled, and managed by the GPS JPO.

6.3.5.2.1 Additional P-code Generation. The generation of 37 mutually exclusive P-code PRN sequences are described in Section 3.3.2.2. The additional set of 173 P-code PRN sequences are generated by circularly shifting each of the original 37 sequences (over one week) by an amount corresponding to 1, 2, 3, 4, or 5 days. The additional sequences are therefore time shifted (i.e. offset) versions of the original 37 sequences. These offset P-code PRN sequences, $P_i(t)$, are described as follows:

$$P_i(t) = P_{i-37x}(t - xT),$$

where i is an integer from 38 to 210, x is an integer portion of (i-1)/37, and T is defined to equal 24 hours.

As an example, P-code sequence for PRN 38 would be the same sequence as PRN 1 shifted 24 hours into a week (i.e. 1st chip of PRN 38 at beginning of week is the same chip for PRN 1 at 24 hours after beginning of week). The complete list of the additional P-code PRN assignment is shown in Table 6-I. Any assignment of a P-code PRN number and its code sequence for any additional SV and/or other L1/L2 signal applications will be selected from the sequences of Table 6-I.

Table 6-I Additional C/A-/P-Code Phase Assignments (sheet 1 of 6)

PRN Signal No. *	C/A			P		
	G2 Delay (Chips)	Initial G2 Setting (Octal)**	First 10 Chips (Octal)**	X2 Delay (Chips)	P-code Relative Delay (Hours) ***	First 12 Chips (Octal)
38	67	0017	1760	1	P_1(t-24)	3373
39	103	0541	1236	2	P_2(t-24)	3757
40	91	1714	0063	3	P_3(t-24)	3545
41	19	1151	0626	4	P_4(t-24)	5440
42	679	1651	0126	5	P_5(t-24)	4402
43	225	0103	1674	6	P_6(t-24)	4023
44	625	0543	1234	7	P_7(t-24)	4233
45	946	1506	0271	8	P_8(t-24)	2337
46	638	1065	0712	9	P_9(t-24)	3375
47	161	1564	0213	10	P_{10}(t-24)	3754
48	1001	1365	0412	11	P_{11}(t-24)	3544
49	554	1541	0236	12	P_{12}(t-24)	3440
50	280	1327	0450	13	P_{13}(t-24)	5402
51	710	1716	0061	14	P_{14}(t-24)	2423
52	709	1635	0142	15	P_{15}(t-24)	5033
53	775	1002	0775	16	P_{16}(t-24)	2637
54	864	1015	0762	17	P_{17}(t-24)	3135
55	558	1666	0111	18	P_{18}(t-24)	5674
56	220	0177	1600	19	P_{19}(t-24)	4514
57	397	1353	0424	20	P_{20}(t-24)	2064
58	55	0426	1351	21	P_{21}(t-24)	5210
59	898	0227	1550	22	P_{22}(t-24)	2726
60	759	0506	1271	23	P_{23}(t-24)	5171
61	367	0336	1441	24	P_{24}(t-24)	2656
62	299	1333	0444	25	P_{25}(t-24)	5105
63	1018	1745	0032	26	P_{26}(t-24)	2660

* PRN sequences 38 through 63 are reserved for GPS.

** In the octal notation for the first 10 chips of the C/A-code or the initial settings as shown in this table, the first digit (1/0) represents a "1" or "0", respectively, for the first chip and the last three digits are the conventional octal representation of the remaining 9 chips. (For example, the first 10 chips of the C/A code for PRN Signal Assembly No. 38 are: 1111110000).

*** P_i(t-N): P-code sequence of PRN number i shifted by N hours. See Section 6.3.5.2.1.

Table 6-I Additional C/A-/P-Code Phase Assignments (sheet 2 of 6)

PRN Signal No.	C/A			P		
	G2 Delay (Chips)	Initial G2 Setting (Octal)**	First 10 Chips (Octal)**	X2 Delay (Chips)	P-code Relative Delay (Hours) ***	First 12 Chips (Octal)
64	729	0254	1523	27	P_{27}(t-24)	5112
65	695	1602	0175	28	P_{28}(t-24)	4667
66	780	1160	0617	29	P_{29}(t-24)	2111
67	801	1114	0663	30	P_{30}(t-24)	5266
68	788	1342	0435	31	P_{31}(t-24)	4711
69	732	0025	1752	32	P_{32}(t-24)	4166
70	34	1523	0254	33	P_{33}(t-24)	2251
71	320	1046	0731	34	P_{34}(t-24)	5306
72	327	0404	1373	35	P_{35}(t-24)	4761
73	389	1445	0332	36	P_{36}(t-24)	2152
74	407	1054	0723	37	P_{37}(t-24)	5247
75	525	0072	1705	1	P_1(t-48)	5736
76	405	0262	1515	2	P_2(t-48)	2575
77	221	0077	1700	3	P_3(t-48)	3054
78	761	0521	1256	4	P_4(t-48)	3604
79	260	1400	0377	5	P_5(t-48)	3520
80	326	1010	0767	6	P_6(t-48)	5472
81	955	1441	0336	7	P_7(t-48)	4417
82	653	0365	1412	8	P_8(t-48)	2025
83	699	0270	1507	9	P_9(t-48)	3230
84	422	0263	1514	10	P_{10}(t-48)	5736
85	188	0613	1164	11	P_{11}(t-48)	4575
86	438	0277	1500	12	P_{12}(t-48)	2054
87	959	1562	0215	13	P_{13}(t-48)	3204
88	539	1674	0103	14	P_{14}(t-48)	3720
89	879	1113	0664	15	P_{15}(t-48)	5572
90	677	1245	0532	16	P_{16}(t-48)	4457
91	586	0606	1171	17	P_{17}(t-48)	4005
92	153	0136	1641	18	P_{18}(t-48)	2220
93	792	0256	1521	19	P_{19}(t-48)	3332
94	814	1550	0227	20	P_{20}(t-48)	3777
95	446	1234	0543	21	P_{21}(t-48)	3555

** In the octal notation for the first 10 chips of the C/A-code or the initial settings as shown in this table, the first digit (1/0) represents a "1" or "0", respectively, for the first chip and the last three digits are the conventional octal representation of the remaining 9 chips. (For example, the first 10 chips of the C/A code for PRN Signal Assembly No. 38 are: 1111110000)

*** P_i(t-N): P-code sequence of PRN number i shifted by N hours. See Section 6.3.5.2.1.

Table 6-I Additional C/A-/P-Code Phase Assignments (sheet 3 of 6)

PRN Signal No.	C/A			P		
	G2 Delay (Chips)	Initial G2 Setting (Octal)**	First 10 Chips (Octal)**	X2 Delay (Chips)	P-code Relative Delay (Hours) ***	First 12 Chips (Octal)
96	264	0260	1517	22	P_{22}(t-48)	3444
97	1015	1455	0322	23	P_{23}(t-48)	3400
98	278	1535	0242	24	P_{24}(t-48)	5422
99	536	0746	1031	25	P_{25}(t-48)	2433
100	819	1033	0744	26	P_{26}(t-48)	3037
101	156	1213	0564	27	P_{27}(t-48)	5635
102	957	0710	1067	28	P_{28}(t-48)	2534
103	159	0721	1056	29	P_{29}(t-48)	5074
104	712	1763	0014	30	P_{30}(t-48)	4614
105	885	1751	0026	31	P_{31}(t-48)	2124
106	461	0435	1342	32	P_{32}(t-48)	5270
107	248	0735	1042	33	P_{33}(t-48)	2716
108	713	0771	1006	34	P_{34}(t-48)	5165
109	126	0140	1637	35	P_{35}(t-48)	4650
110	807	0111	1666	36	P_{36}(t-48)	2106
111	279	0656	1121	37	P_{37}(t-48)	5261
112	122	1016	0761	1	P_1(t-72)	2752
113	197	0462	1315	2	P_2(t-72)	5147
114	693	1011	0766	3	P_3(t-72)	4641
115	632	0552	1225	4	P_4(t-72)	2102
116	771	0045	1732	5	P_5(t-72)	5263
117	467	1104	0673	6	P_6(t-72)	2713
118	647	0557	1220	7	P_7(t-72)	3167
119	203	0364	1413	8	P_8(t-72)	3651
120	145	1106	0671	9	P_9(t-72)	3506
121	175	1241	0536	10	P_{10}(t-72)	5461
122	52	0267	1510	11	P_{11}(t-72)	4412
123	21	0232	1545	12	P_{12}(t-72)	2027
124	237	1617	0160	13	P_{13}(t-72)	5231
125	235	1076	0701	14	P_{14}(t-72)	2736

** In the octal notation for the first 10 chips of the C/A-code or the initial settings as shown in this table, the first digit (1/0) represents a "1" or "0", respectively, for the first chip and the last three digits are the conventional octal representation of the remaining 9 chips. (For example, the first 10 chips of the C/A code for PRN Signal Assembly No. 38 are: 1111110000)

*** P_i(t-N): P-code sequence of PRN number i shifted by N hours. See Section 6.3.5.2.1.

Table 6-I Additional C/A-/P-Code Phase Assignments (sheet 4 of 6)

PRN Signal No.	C/A			P		
	G2 Delay (Chips)	Initial G2 Setting (Octal)**	First 10 Chips (Octal)**	X2 Delay (Chips)	P-code Relative Delay (Hours) ***	First 12 Chips (Octal)
126	886	1764	0013	15	P_{15}(t-72)	3175
127	657	0717	1060	16	P_{16}(t-72)	5654
128	634	1532	0245	17	P_{17}(t-72)	2504
129	762	1250	0527	18	P_{18}(t-72)	5060
130	355	0341	1436	19	P_{19}(t-72)	2612
131	1012	0551	1226	20	P_{20}(t-72)	3127
132	176	0520	1257	21	P_{21}(t-72)	5671
133	603	1731	0046	22	P_{22}(t-72)	4516
134	130	0706	1071	23	P_{23}(t-72)	4065
135	359	1216	0561	24	P_{24}(t-72)	4210
136	595	0740	1037	25	P_{25}(t-72)	4326
137	68	1007	0770	26	P_{26}(t-72)	4371
138	386	0450	1327	27	P_{27}(t-72)	2356
139	797	0305	1472	28	P_{28}(t-72)	5345
140	456	1653	0124	29	P_{29}(t-72)	4740
141	499	1411	0366	30	P_{30}(t-72)	2142
142	883	1644	0133	31	P_{31}(t-72)	5243
143	307	1312	0465	32	P_{32}(t-72)	2703
144	127	1060	0717	33	P_{33}(t-72)	5163
145	211	1560	0217	34	P_{34}(t-72)	4653
146	121	0035	1742	35	P_{35}(t-72)	4107
147	118	0355	1422	36	P_{36}(t-72)	4261
148	163	0335	1442	37	P_{37}(t-72)	4312
149	628	1254	0523	1	P_1(t-96)	2525
150	853	1041	0736	2	P_2(t-96)	3070
151	484	0142	1635	3	P_3(t-96)	5616
152	289	1641	0136	4	P_4(t-96)	2525
153	811	1504	0273	5	P_5(t-96)	3070
154	202	0751	1026	6	P_6(t-96)	3616
155	1021	1774	0003	7	P_7(t-96)	3525

** In the octal notation for the first 10 chips of the C/A-code or the initial settings as shown in this table, the first digit (1/0) represents a "1" or "0", respectively, for the first chip and the last three digits are the conventional octal representation of the remaining 9 chips. (For example, the first 10 chips of the C/A code for PRN Signal Assembly No. 38 are: 1111110000)

*** P_i(t-N): P-code sequence of PRN number i shifted by N hours. See Section 6.3.5.2.1.

Table 6-I Additional C/A-/P-Code Phase Assignments (sheet 5 of 6)

PRN Signal No.	C/A			P		
	G2 Delay (Chips)	Initial G2 Setting (Octal)**	First 10 Chips (Octal)**	X2 Delay (Chips)	P-code Relative Delay (Hours) ***	First 12 Chips (Octal)
156	463	0107	1670	8	P_8(t-96)	5470
157	568	1153	0624	9	P_9(t-96)	4416
158	904	1542	0235	10	P_{10}(t-96)	4025
159	670	1223	0554	11	P_{11}(t-96)	4230
160	230	1702	0075	12	P_{12}(t-96)	4336
161	911	0436	1341	13	P_{13}(t-96)	2375
162	684	1735	0042	14	P_{14}(t-96)	5354
163	309	1662	0115	15	P_{15}(t-96)	2744
164	644	1570	0207	16	P_{16}(t-96)	5140
165	932	1573	0204	17	P_{17}(t-96)	4642
166	12	0201	1576	18	P_{18}(t-96)	4103
167	314	0635	1142	19	P_{19}(t-96)	2263
168	891	1737	0040	20	P_{20}(t-96)	5313
169	212	1670	0107	21	P_{21}(t-96)	2767
170	185	0134	1643	22	P_{22}(t-96)	5151
171	675	1224	0553	23	P_{23}(t-96)	2646
172	503	1460	0317	24	P_{24}(t-96)	3101
173	150	1362	0415	25	P_{25}(t-96)	5662
174	395	1654	0123	26	P_{26}(t-96)	4513
175	345	0510	1267	27	P_{27}(t-96)	2067
176	846	0242	1535	28	P_{28}(t-96)	3211
177	798	1142	0635	29	P_{29}(t-96)	3726
178	992	1017	0760	30	P_{30}(t-96)	3571
179	357	1070	0707	31	P_{31}(t-96)	3456
180	995	0501	1276	32	P_{32}(t-96)	3405
181	877	0455	1322	33	P_{33}(t-96)	3420
182	112	1566	0211	34	P_{34}(t-96)	5432
183	144	0215	1562	35	P_{35}(t-96)	4437
184	476	1003	0774	36	P_{36}(t-96)	2035
185	193	1454	0323	37	P_{37}(t-96)	5234

** In the octal notation for the first 10 chips of the C/A-code or the initial settings as shown in this table, the first digit (1/0) represents a "1" or "0", respectively, for the first chip and the last three digits are the conventional octal representation of the remaining 9 chips. (For example, the first 10 chips of the C/A code for PRN Signal Assembly No. 38 are: 1111110000)

*** P_i(t-N): P-code sequence of PRN number i shifted by N hours. See Section 6.3.5.2.1.

Table 6-I Additional C/A-/P-Code Phase Assignments (sheet 6 of 6)

PRN Signal No.	C/A			P		
	G2 Delay (Chips)	Initial G2 Setting (Octal)**	First 10 Chips (Octal)**	X2 Delay (Chips)	P-code Relative Delay (Hours) ***	First 12 Chips (Octal)
186	109	1665	0112	1	P_1(t-120)	5067
187	445	0471	1306	2	P_2(t-120)	2611
188	291	1750	0027	3	P_3(t-120)	5126
189	87	0307	1470	4	P_4(t-120)	4671
190	399	0272	1505	5	P_5(t-120)	4116
191	292	0764	1013	6	P_6(t-120)	2265
192	901	1422	0355	7	P_7(t-120)	5310
193	339	1050	0727	8	P_8(t-120)	2766
194	208	1607	0170	9	P_9(t-120)	5151
195	711	1747	0030	10	P_{10}(t-120)	2646
196	189	1305	0472	11	P_{11}(t-120)	3101
197	263	0540	1237	12	P_{12}(t-120)	3662
198	537	1363	0414	13	P_{13}(t-120)	5513
199	663	0727	1050	14	P_{14}(t-120)	4467
200	942	0147	1630	15	P_{15}(t-120)	4011
201	173	1206	0571	16	P_{16}(t-120)	4226
202	900	1045	0732	17	P_{17}(t-120)	4331
203	30	0476	1301	18	P_{18}(t-120)	4376
204	500	0604	1173	19	P_{19}(t-120)	2355
205	935	1757	0020	20	P_{20}(t-120)	5344
206	556	1330	0447	21	P_{21}(t-120)	4740
207	373	0663	1114	22	P_{22}(t-120)	2142
208	85	1436	0341	23	P_{23}(t-120)	5243
209	652	0753	1024	24	P_{24}(t-120)	2703
210	310	0731	1046	25	P_{25}(t-120)	5163

** In the octal notation for the first 10 chips of the C/A-code or the initial settings as shown in this table, the first digit (1/0) represents a "1" or "0", respectively, for the first chip and the last three digits are the conventional octal representation of the remaining 9 chips. (For example, the first 10 chips of the C/A code for PRN Signal Assembly No. 38 are: 1111110000)

*** P_i(t-N): P-code sequence of PRN number i shifted by N hours. See Section 6.3.5.2.1.

6.3.5.3 Additional L2 CM-/L2 CL-Code PRN sequences. The PRN L2 CM-code and L2 CL-code are described in Sections 3.2.1.4 and 3.2.1.5, respectively, and 37 L2 CM-/L2 CL-code sequence pairs are assigned by SV-ID number in Table 3-II. An additional set of 80 L2 CM-/L2 CL-code PRN sequence pairs are selected and assigned with PRN numbers in this section as shown in Table 6-II. Among the 80 additional sequences, PRN numbers 38 through 63 are reserved for future GPS SVs, and PRN numbers 159 through 210 are reserved for other GNSS applications. PRN allocations do not exist for numbers 64 through 158 for L2 CM-/L2 CL-code. Any assignment of a L2 CM-/L2 CL-code PRN number and its code sequence pair for any additional SV and/or other L2 signal applications will be selected from the sequences of Table 6-II and will be approved, controlled, and managed by the GPS JPO.

Table 6-II. Additional L2 CM-/L2 CL-Code Phase Assignments (sheet 1 of 3)

PRN Signal No. ***	Initial Shift Register State (Octal)		End Shift Register State (Octal)	
	L2 CM	L2 CL	L2 CM *	L2 CL **
38	771353753	101232630	453413162	463624741
39	226107701	132525726	637760505	673421367
40	022025110	315216367	612775765	703006075
41	402466344	377046065	136315217	746566507
42	752566114	655351360	264252240	444022714
43	702011164	435776513	113027466	136645570
44	041216771	744242321	774524245	645752300
45	047457275	024346717	161633757	656113341
46	266333164	562646415	603442167	015705106
47	713167356	731455342	213146546	002757466
48	060546335	723352536	721323277	100273370
49	355173035	000013134	207073253	304463615
50	617201036	011566642	130632332	054341657
51	157465571	475432222	606370621	333276704
52	767360553	463506741	330610170	750231416
53	023127030	617127534	744312067	541445326
54	431343777	026050332	154235152	316216573
55	747317317	733774235	525024652	007360406
56	045706125	751477772	535207413	112114774
57	002744276	417631550	655375733	042303316
58	060036467	052247456	316666241	353150521
59	217744147	560404163	525453337	044511154
60	603340174	417751005	114323414	244410144
61	326616775	004302173	755234667	562324657
62	063240065	715005045	526032633	027501534
63	111460621	001154457	602375063	521240373

* Short cycled period = 10230
** Short cycled period = 767250
*** PRN sequences 38 through 63 are reserved for GPS.

Table 6-II. Additional L2 CM-/L2 CL-Code Phase Assignments (sheet 2 of 3)				
PRN Signal No.	Initial Shift Register State (Octal)		End Shift Register State (Octal)	
	L2 CM	L2 CL	L2 CM *	L2 CL **
159	604055104	605253024	425373114	044547544
160	157065232	063314262	427153064	707116115
161	013305707	066073422	310366577	412264037
162	603552017	737276117	623710414	223755032
163	230461355	737243704	252761705	403114174
164	603653437	067557532	050174703	671505575
165	652346475	227354537	050301454	606261015
166	743107103	704765502	416652040	223023120
167	401521277	044746712	050301251	370035547
168	167335110	720535263	744136527	516101304
169	014013575	733541364	633772375	044115766
170	362051132	270060042	007131446	704125517
171	617753265	737176640	142007172	406332330
172	216363634	133776704	655543571	506446631
173	755561123	005645427	031272346	743702511
174	365304033	704321074	203260313	022623276
175	625025543	137740372	226613112	704221045
176	054420334	056375464	736560607	372577721
177	415473671	704374004	011741374	105175230
178	662364360	216320123	765056120	760701311
179	373446602	011322115	262725266	737141001
180	417564100	761050112	013051476	227627616
181	000526452	725304036	144541215	245154134
182	226631300	721320336	534125243	040015760
183	113752074	443462103	250001521	002154472
184	706134401	510466244	276000566	301767766
185	041352546	745522652	447447071	226475246
186	664630154	373417061	000202044	733673015
187	276524255	225526762	751430577	602507667
188	714720530	047614504	136741270	753362551
189	714051771	034730440	257252440	746265601
190	044526647	453073141	757666513	036253206

* Short cycled period = 10230
** Short cycled period = 767250

Table 6-II. Additional L2 CM-/L2 CL-Code Phase Assignments (sheet 3 of 3)				
PRN Signal No.	Initial Shift Register State (Octal)		End Shift Register State (Octal)	
	L2 CM	L2 CL	L2 CM *	L2 CL **
191	207164322	533654510	606512137	202512772
192	262120161	377016461	734247645	701234023
193	204244652	235525312	415505547	722043377
194	202133131	507056307	705146647	240751052
195	714351204	221720061	006215430	375674043
196	657127260	520470122	371216176	166677056
197	130567507	603764120	645502771	123055362
198	670517677	145604016	455175106	707017665
199	607275514	051237167	127161032	437503241
200	045413633	033326347	470332401	275605155
201	212645405	534627074	252026355	376333266
202	613700455	645230164	113771472	467523556
203	706202440	000171400	754447142	144132537
204	705056276	022715417	627405712	451024205
205	020373522	135471311	325721745	722446427
206	746013617	137422057	056714616	412376261
207	132720621	714426456	706035241	441570172
208	434015513	640724672	173076740	063217710
209	566721727	501254540	145721746	110320656
210	140633660	513322453	465052527	113765506

* Short cycled period = 10230
** Short cycled period = 767250

(This page intentionally left blank.)

10. APPENDIX I. LETTERS OF EXCEPTION

10.1 Scope. Approval of this document, as well as approval of any subsequent changes to the document, can be contingent upon a "letter of exception". This appendix depicts such "letters of exception" when authorized by the GPS JPO.

10.2 Applicable Documents. The documents listed in Section 2.0 shall be applicable to this appendix.

10.3 Letters of Exception. Any letter of exception which is in force for the revision of the IS is depicted in Figure 10-1.

(This page intentionally left blank.)

Lockheed Martin Space Systems Company
Space & Strategic Missiles
Valley Forge Operations
P.O. Box 8555 Philadelphia, PA 19101

LOCKHEED MARTIN

26 May 2003
GPS IIR-CM-MOD-147

SMC/CZK
2420 VELA WAY, SUITE 1467
LOS ANGELES AFB CA 90245-4659

Attention: Mr. David Smith

Subject: GPS Block IIR Modernization Contract F04701-00-C-0006
Review and approval of ICD-GPS-PIRN-200C-007B, dated 08 November 2003, post 9 April 2003 CCB (L2C = -160).

Reference: 1) PCOL# 03-012, dated 22 May 03; F04701-00-C-0006; REQUEST FOR IMPACTS DUE TO IMPLEMENTING PROPOSED CHANGES TO PIRN-200C-007 REVISION B

Dear Mr. Smith:

Lockheed Martin Space Systems Company has been asked to review and comment on changes made to ICD-GPS-PIRN-200C-007B at the JPO CCB boarded on or about 09 April 2003. It is our understanding that the ONLY change made to the 08 November 2002 of the subject ICD is L2C for IIR-M SVs changed from –161.4 dBW to –160.0 dBW.

Based on that change, Lockheed Martin takes exception to IIR-M L2 C signal power specified in Table 3-III. Per Lockheed Martin contract requirements as specified in SS-SS-500, Rev. A, dated 14 May 2001, LMSSC calculates links using:

- 0-dBi circularly polarized user receiving antenna (located) near ground when the SV is above a 5° elevation angle
- Atmospheric loss of 0.5 dB at edge of earth
- Assumes SV antenna gains are averaged about azimuth

Using the assumptions as specified in paragraph 3.3.1.6 of PIRN-200C-007B, the GPS IIRM SVs provide a minimum receive signal of -161.4 dBW for L2 C signal. Lockheed Martin therefore takes exception to -160 dBW for L2C of PIRN-200c-007B. Formal request for cost and schedule impacts should come through the JPO Contracting Officer.

To change from -161.4 dBW to -160.0 dBW would have to be analyzed and coordinated between Lockheed Martin and ITT. If such a change were technically possible, there would be impacts to L-Band level testing, SV level testing, test scripts, Specs, OOH, and various ICDs. These impacts would be in both cost and schedule.

Figure 10-1. Letters of Exception.

Currently, there is an ongoing effort between Lockheed Martin, Boeing, Arinc, Aerospace, and the JPO concerning signal flexibility under the ConOps study. Lockheed Martin recommends, based on the outcome and direction of this effort, that an impact to the ICD-200 change be included in the resulting request for ROMs for Flex Power implementation.

Note that if Lockheed Martin has taken earlier exception to a change in any requirements in a previous revision of this document, Lockheed Martin continues to take exception to that change. A letter explicitly stating that the exception is no longer valid will accomplish the retraction of an exception.

Should you have any questions, please contact Martin O'Connor at (610) 354-7866 for technical concerns, or the undersigned at (610) 354-7989 for contractual matters.

Very truly yours,

LOCKHEED MARTIN CORPORATION

Signature on file
Brent B. Achee II
GPS Block IIR Deputy Program Director

xc: Capt. K. Eggehorn
Mary Guyes
Soon Yi, ARINC
J. Windfelder, DCMC

Figure 10-1. Letters of Exception (continued).

Lockheed Martin Space Systems Company
Space & Strategic Missiles
Valley Forge Operations
P.O. Box 8555 Philadelphia, PA 19101

LOCKHEED MARTIN

27 September 2004
GPS IIR-CM-3023, Rev A

ARINC
2250 E. Imperial Highway, Suite 450
El Segundo, CA 90245-3546

Attention: Mr. Soon K. Yi

Subject: Review of IS-GPS-200 Rev D

Reference:
1) Contract F04701-89-C-0073
2) IS-GPS-200D, dated 09 July 2004

Dear Mr. Yi:

Lockheed Martin Space Systems Company has reviewed the subject version of IS-GPS-200D, dated 09 July 2004. It is Lockheed Martin's understanding that the JPO and ARINC are in the process of incorporating major changes to ICD-200C, eliminating multiple Letters of Exception, and change the Interface Control Document to an Interface Specification (IS). With this in mind, Lockheed Martin is rescinding all previous letters of exception:

1. GPS IIR-CM-1046, dated 17 August 1994
2. GPS IIR-CM-MOD-0097, dated 08 May 2002
3. GPS IIR-CM-2837, dated 26 May 2003
4. GPS IIR-CM-MOD-0177, dated 16 March 2004

Lockheed Martin would like to establish this correspondence for the review of IS-GPS-200 as the baseline letter of exception. Lockheed Martin is taking exception to:

1. L2CNAV
2. IIR-M L2C Signal Power, as defined in Table 3-V

The original Letter of Exception, dated 09 September 2004 listed IODC as an exception. Lockheed Martin has been able to verify this exception no longer exists. This revision to the LOE should therefore be used in it's place. Specific reasoning for these exceptions are documented in the attached table.

Lockheed Martin is also submitting technical comments identified herein. If this document is approved at JPO CCB, LMSSC will expect a letter from JPO requesting cost and schedule impacts to implement these out-of-scope requirements on the IIR and IIR-M contracts.

Per discussions with ARINC, telecons with the JPO, and the IS-200D review directions, it is Lockheed Martin's understanding that the once this document is Configuration Controlled by the JPO, ICD-200 will be removed from Lockheed Martin's contract with the government and replace with IS-200. The approved IS-200 will contain this LOE and Lockheed Martin will be notified in writing as to changes that occurred as part of the CCB process for concurrence to said changes

Figure 10-1. Letters of Exception (continued).

Should you have any questions, please contact Marty O'Connor at (610) 354-7866 for technical concerns, or the undersigned at (610) 354-2569 for contractual matters.

Very truly yours,

LOCKHEED MARTIN CORPORATION

Signature on file
Paul E. Ruffo, CPCM
Manager of Contracts
GPS Block IIR, IIR-M, III

xc: Mary Guyes
A. Trader
J. Windfelder, DCMA
Capt. Brian Knight

Figure 10-1. Letters of Exception (continued).

The Boeing Company
5301 Bolsa Avenue
Huntington Beach, CA 92647

December 6, 2004
AFSS-GPSIIF-K211-JMH-04-0718

Headquarters, Space and Missile (SMC)
SMC/GPK
2420 Vela Way, Suite 1467
El Segundo, CA 90245-4659

BOEING

Dear Ms. Brown:

Subject: F04701-96-C-0025; Global Positioning System (GPS) Block IIF-Disposition of IS-GPS-200D

Reference: (a) Email from S. Coletti/Boeing to Felicia Brown and Lt. Kevin Reyes/AF on November 22, 2004
(b) PCOL 04-085 letter dated November 02, 2004

Per the Referenced (a) email, Boeing provided its assessment of both cost and schedule impact to the latest IS version (October 8, 2004). Boeing has reviewed IS-GPS-200D per the original direction of the Referenced (b) letter. The content of this document that has been determined out of scope of the Boeing contractual baseline is listed below:

IS-GPS-200D

Location	Exception	Rationale for Exception	Cost Impact	Schedule Impact
Page 143	New L2 CNAV Message	L2 CNAV Message 32 requires change to UG, Pred, UCD and possible generation of raw data.	High	High
Page 145	New L2 CNAV Message	L2 CNAV Message 34 requires change to UG, Pred, UCD and possible generation of raw data.	High	High
Page 146	New L2 CNAV Message	L2 CNAV Message 35 requires change to UG, Pred, UCD and possible generation of raw data.	High	High

Figure 10-1. Letters of Exception (continued).

The Boeing Company
5301 Bolsa Avenue
Huntington Beach, CA 92647

AFSS-GPSIIF-K211-JMH-04-0718
Headquarters, Space and Missile (SMC)
Page 2 of 2

Page 147	New L2 CNAV Message	L2 CNAV Message 36 requires change to UG, Pred, UCD and possible generation of raw data.	High	High
Page 148	New L2 CNAV	L2 CNAV Message 37 requires change to UG, Pred, UCD and possible generation of raw data.	High	High
Page 150	New L2 CNAV	L2 CNAV Message 13 requires change to UG, Pred, UCD and possible generation of raw data.	High	High
Page 151	New L2 CNAV	L2 CNAV Message 14 requires change to UG, Pred, UCD and possible generation of raw data.	High	High
Page 152	New L2 CNAV	L2 CNAV Message 15 requires change to UG, Pred, UCD and possible generation of raw data.	High	High

For purposes of this assessment, a High Impact to cost is defined as greater than $250,000.

Should you require any additional information please contact the undersigned at telephone (714) 896-2561.

Sincerely,

J. M. Hughes
Sr. Manager - Contracts & Pricing
GPS IIF Program
Air Force Space Systems
M/C: H011-B145

JMH:jmh

Figure 10-1. Letters of Exception (continued).

20. APPENDIX II. GPS NAVIGATION DATA STRUCTURE FOR DATA, D(t)

20.1 Scope. This appendix describes the specific GPS navigation (NAV) data structure denoted as D(t). When transmitted as part of the NAV data, D(t), the specific data structure of D(t) shall be denoted by data ID number 2, represented by the two-bit binary notation as 01.

20.2 Applicable Documents.

20.2.1 Government Documents. In addition to the documents listed in paragraph 2.1, the following documents of the issue specified contribute to the definition of the NAV data related interfaces and form a part of this Appendix to the extent specified herein.

Specifications

None

Standards

None

Other Publications

None

20.2.2 Non-Government Documents. In addition to the documents listed in paragraph 2.2, the following documents of the issue specified contribute to the definition of the NAV data related interfaces and form a part of this Appendix to the extent specified herein.

Specifications

None

Other Publications

None

(This page intentionally left blank.)

20.3 Requirements

20.3.1 Data Characteristics. The data stream shall be transmitted by the SV on the L1 and L2 channels at a rate of 50 bps. In addition, upon ground command, the data stream shall be transmitted by the Block IIR-M SV on the L2 CM channel at a rate of 25 bps using FEC encoding resulting in 50 sps.

20.3.2 Message Structure. As shown in Figure 20-1, the message structure shall utilize a basic format of a 1500 bit long frame made up of five subframes, each subframe being 300 bits long. Subframes 4 and 5 shall be subcommutated 25 times each, so that a complete data message shall require the transmission of 25 full frames. The 25 versions of subframes 4 and 5 shall be referred to herein as pages 1 through 25 of each subframe. Each subframe shall consist of ten words, each 30 bits long; the MSB of all words shall be transmitted first.

Each subframe and/or page of a subframe shall contain a telemetry (TLM) word and a handover word (HOW), both generated by the SV, and shall start with the TLM/HOW pair. The TLM word shall be transmitted first, immediately followed by the HOW. The latter shall be followed by eight data words. Each word in each frame shall contain parity (reference Section 20.3.5).

Block II and IIA SVs are designed with sufficient memory capacity for storing at least 60 days of uploaded NAV data. However, the memory retention of these SVs will determine the duration of data transmission. Block IIR SVs have the capability, with current memory margin, to store at least 60 days of uploaded NAV data in the Block IIA mode and to store at least 60 days of CS data needed to generate NAV data on-board in the Autonav mode. Alternating ones and zeros will be transmitted in words 3 through 10 in place of the normal NAV data whenever the SV cannot locate the requisite valid control or data element in its on-board computer memory. The following specifics apply to this default action: (a) the parity of the affected words will be invalid, (b) the two trailing bits of word 10 will be zeros (to allow the parity of subsequent subframes to be valid -- reference paragraph 20.3.5), (c) if the problem is the lack of a data element, only the directly related subframe(s) will be treated in this manner, (d) if a control element cannot be located, this default action will be applied to all subframes and all subframes will indicate ID = 1 (Block II/IIA only) (i.e., an ID-code of 001) in the HOW (reference paragraph 20.3.3.2) (Block IIR/IIR-M and IIF SVs indicate the proper subframe ID for all subframes). Certain failures of control elements which may occur in the SV memory or during an upload will cause the SV to transmit in non-standard codes (NSC and NSY) which would preclude normal use by the US. Normal NAV data transmission will be resumed by the SV whenever a valid set of elements becomes available.

Block II/IIA SVs are uploaded with a minimum of 60 days of NAV data. However, the EAROM retentivity for Block II SVs is designed and guaranteed for only 14 days. Therefore, Block II SV memory is most likely to fail sometime during long-term extended operations after repeated write operations. In the case of memory failure, the SV will transmit alternating ones and zeros in word 3-10 as specified in the above paragraph. The EAROM retentivity for Block IIA SVs is designed and guaranteed for at least 60 days.

The memory retentivity for the Block IIR/IIR-M/IIF SVs is designed and guaranteed for at least 60 days.

Although the data content of the SVs will be temporarily reduced during the upload process, the transmission of valid NAV data will be continuous. The data capacity of specific operational SVs may be reduced to accommodate partial memory failures.

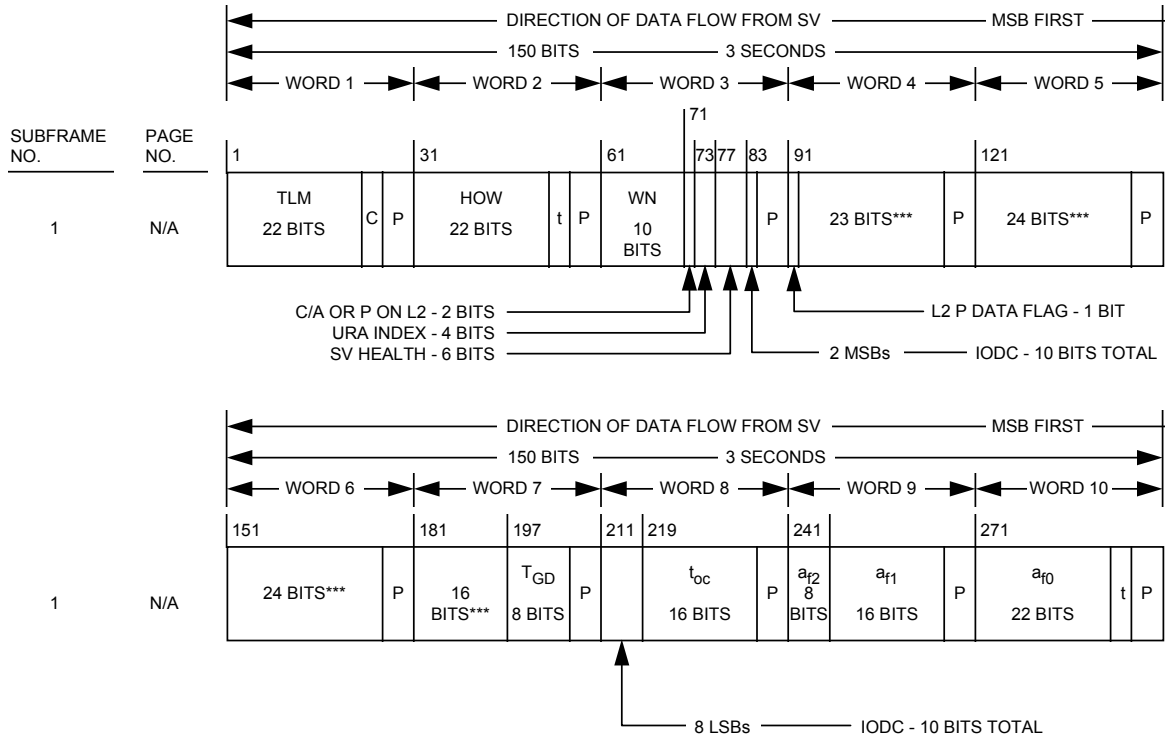

*** RESERVED
P = 6 PARITY BITS
t = 2 NONINFORMATION BEARING BITS USED FOR PARITY COMPUTATION (SEE PARAGRAPH 20.3.5)
C = TLM BITS 23 AND 24 WHICH ARE RESERVED

Figure 20-1. Data Format (sheet 1 of 11)

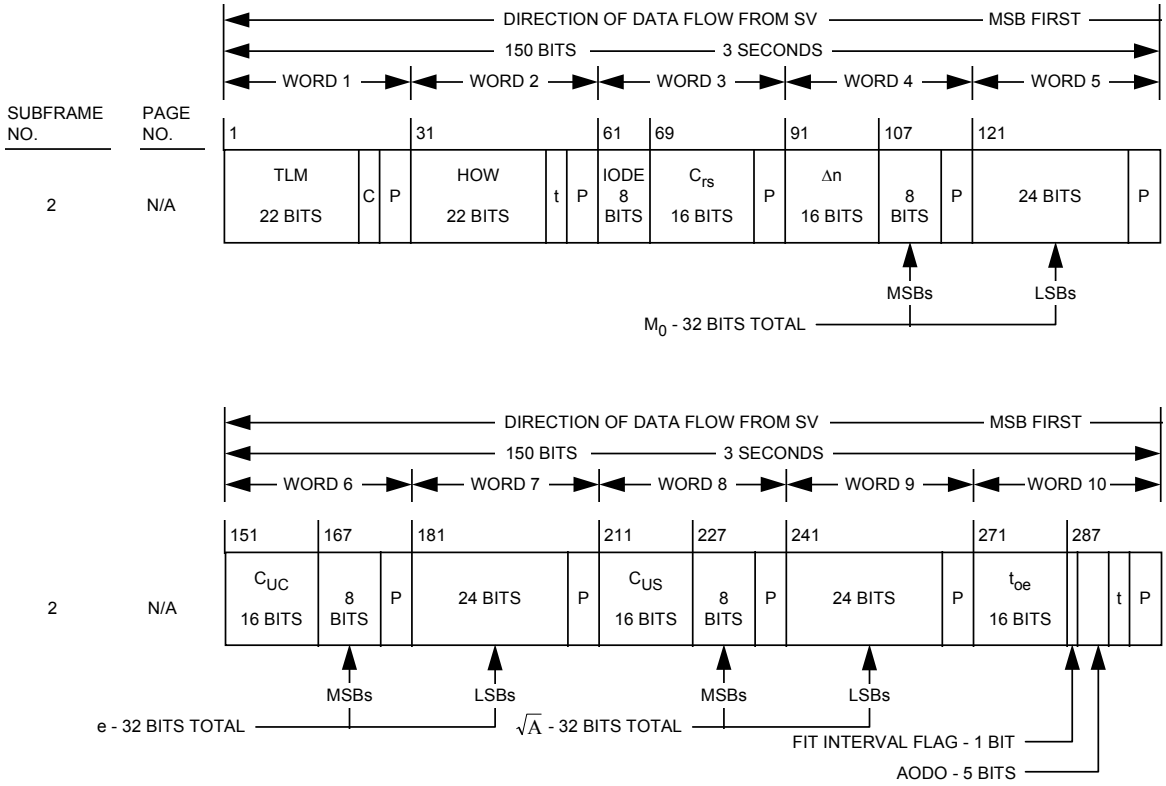

P = 6 PARITY BITS
t = 2 NONINFORMATION BEARING BITS USED FOR PARITY COMPUTATION (SEE PARAGRAPH 20.3.5)
C = TLM BITS 23 AND 24 WHICH ARE RESERVED

Figure 20-1. Data Format (sheet 2 of 11)

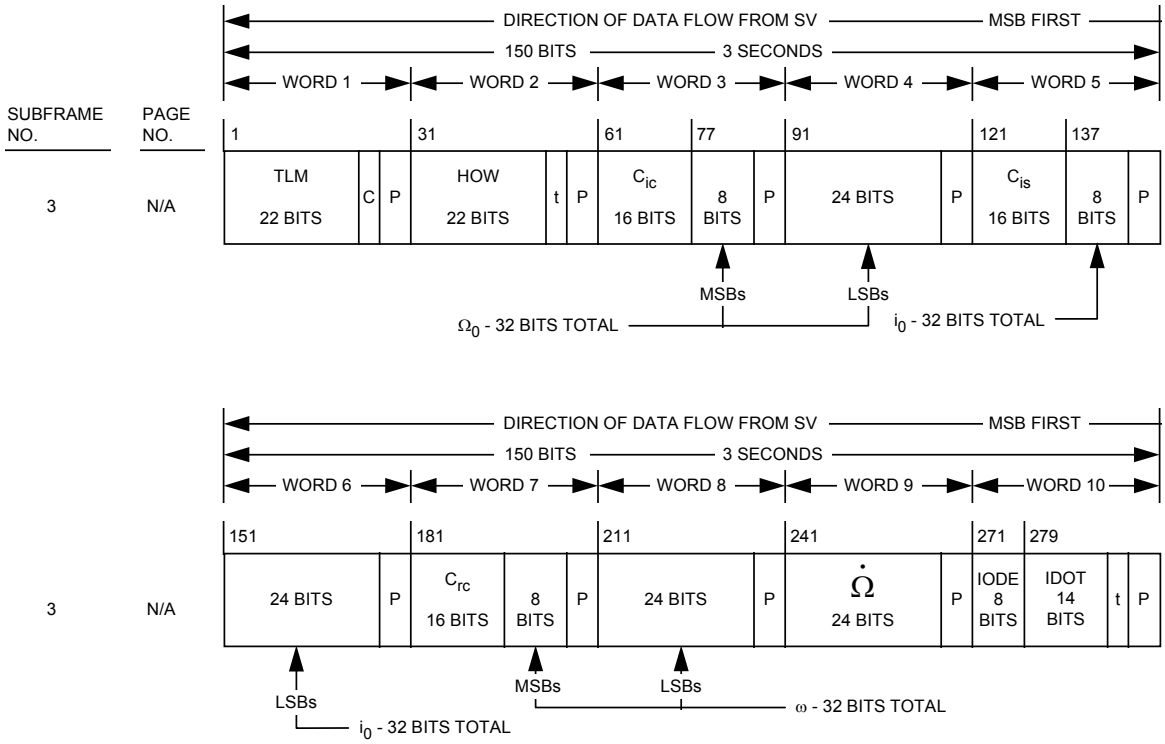

P = 6 PARITY BITS
t = 2 NONINFORMATION BEARING BITS USED FOR PARITY COMPUTATION (SEE PARAGRAPH 20.3.5)
C = TLM BITS 23 AND 24 WHICH ARE RESERVED

Figure 20-1. Data Format (sheet 3 of 11)

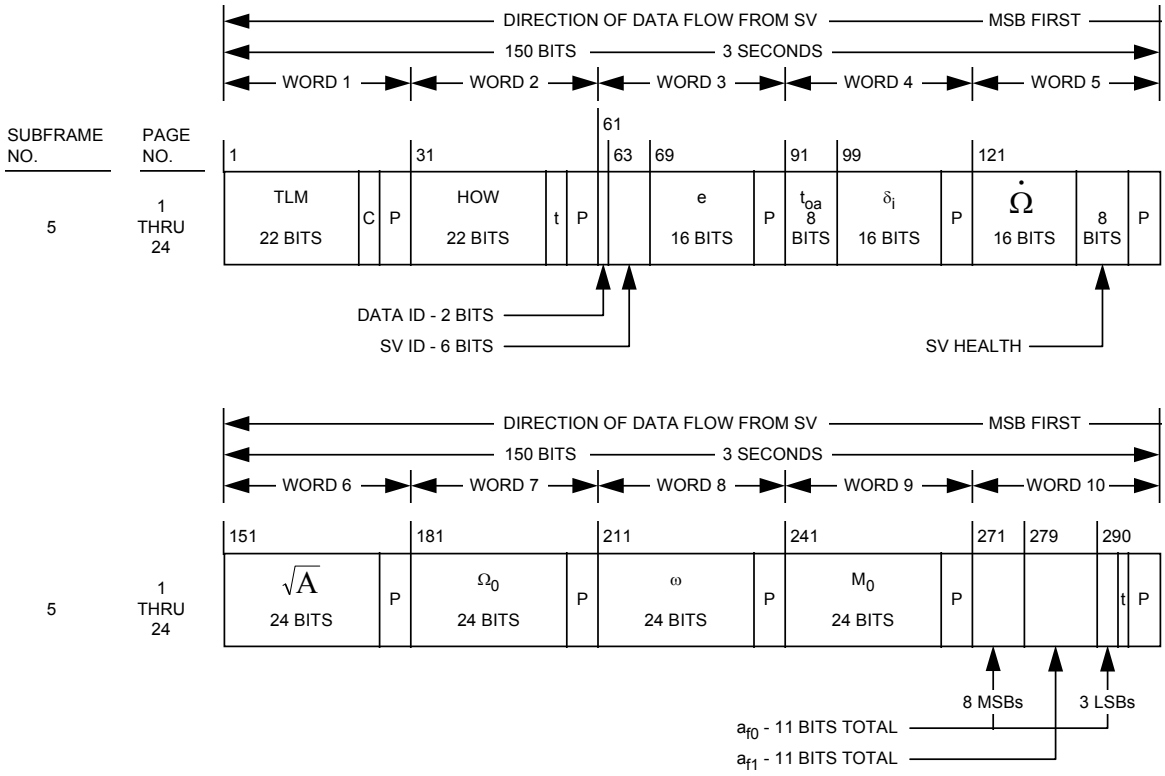

P = 6 PARITY BITS
t = 2 NONINFORMATION BEARING BITS USED FOR PARITY COMPUTATION (SEE PARAGRAPH 20.3.5)
C = TLM BITS 23 AND 24 WHICH ARE RESERVED
NOTE: PAGES 2, 3, 4, 5, 7, 8, 9 & 10 OF SUBFRAME 4 HAVE THE SAME FORMAT AS PAGES 1 THROUGH 24 OF SUBFRAME 5

Figure 20-1. Data Format (sheet 4 of 11)

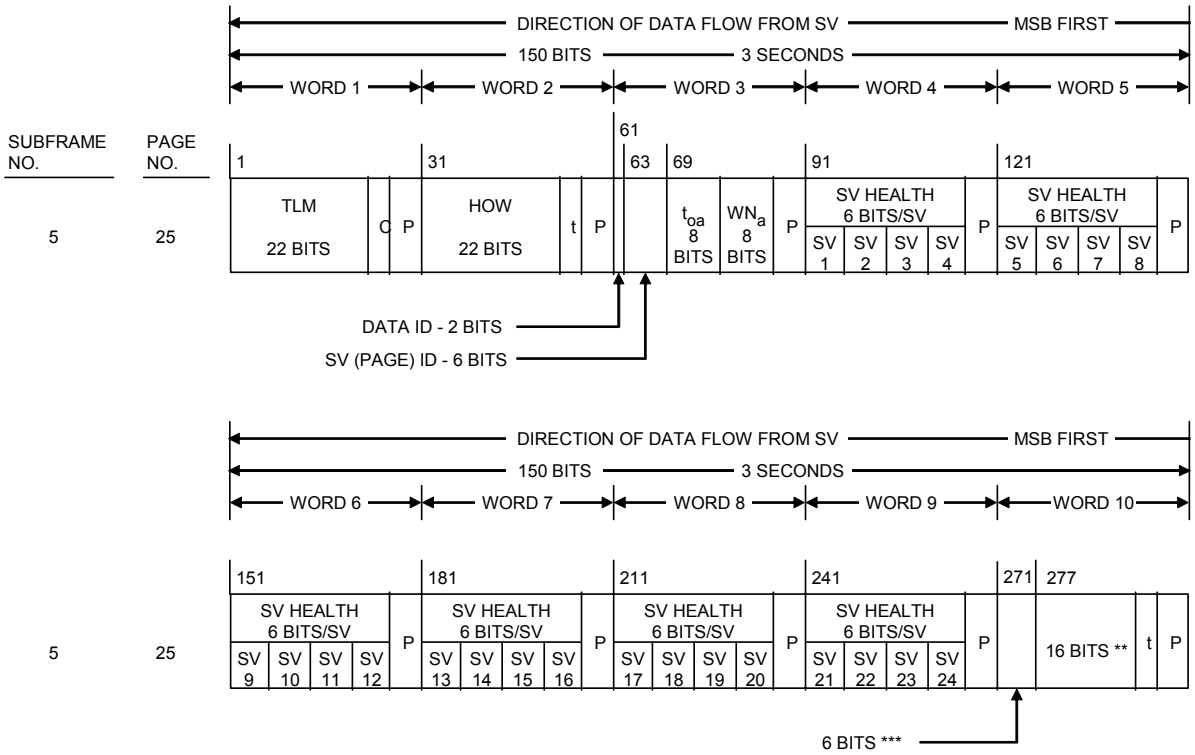

** RESERVED FOR SYSTEM USE
*** RESERVED
P = 6 PARITY BITS
t = 2 NONINFORMATION BEARING BITS USED FOR PARITY COMPUTATION (SEE PARAGRAPH 20.3.5)
C = TLM BITS 23 AND 24 WHICH ARE RESERVED

Figure 20-1. Data Format (sheet 5 of 11)

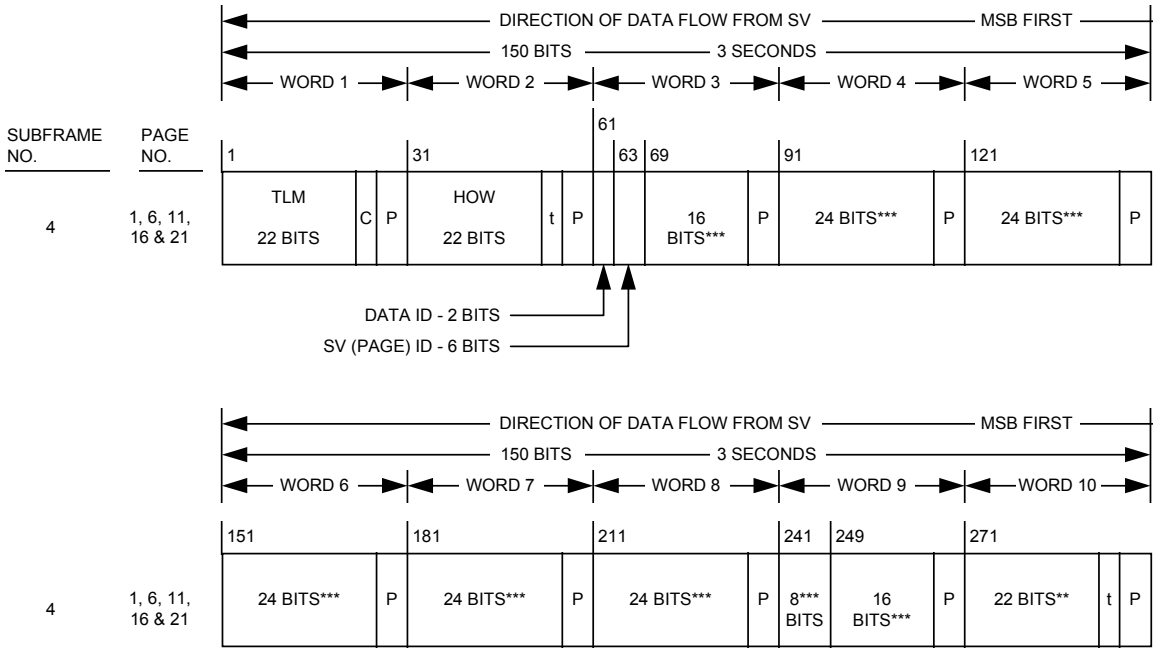

** RESERVED FOR SYSTEM USE
*** RESERVED
P = 6 PARITY BITS
t = 2 NONINFORMATION BEARING BITS USED FOR PARITY COMPUTATION (SEE PARAGRAPH 20.3.5)
C = TLM BITS 23 AND 24 WHICH ARE RESERVED

Figure 20-1. Data Format (sheet 6 of 11)

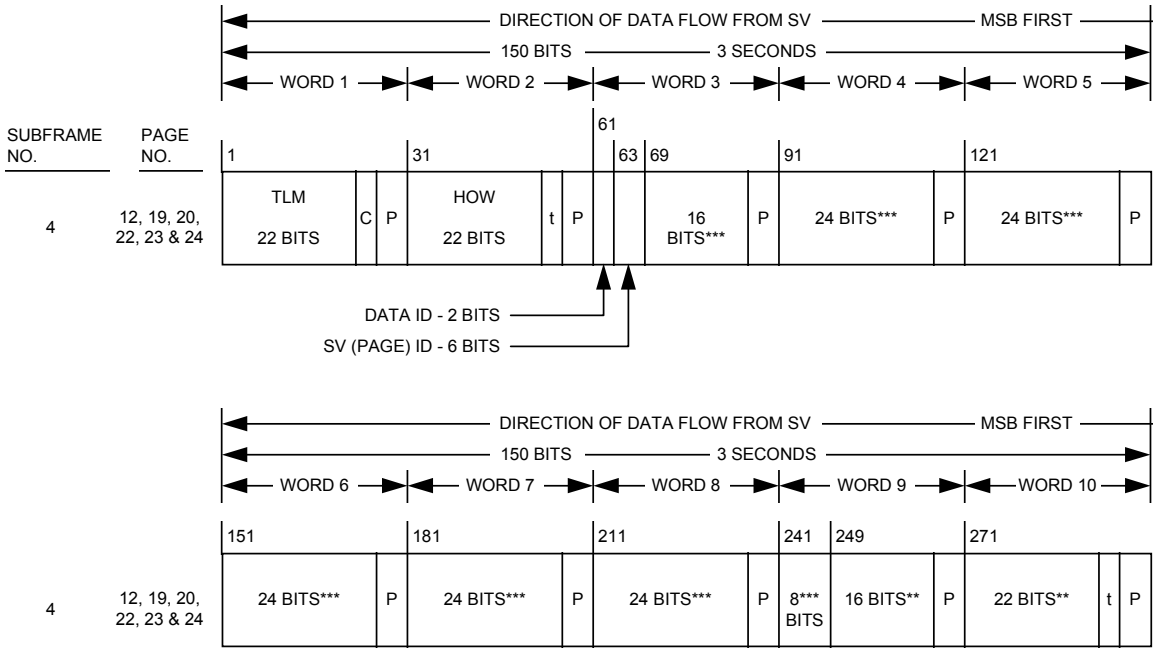

** RESERVED FOR SYSTEM USE
*** RESERVED
P = 6 PARITY BITS
t = 2 NONINFORMATION BEARING BITS USED FOR PARITY COMPUTATION (SEE PARAGRAPH 20.3.5)
C = TLM BITS 23 AND 24 WHICH ARE RESERVED

Figure 20-1. Data Format (sheet 7 of 11)

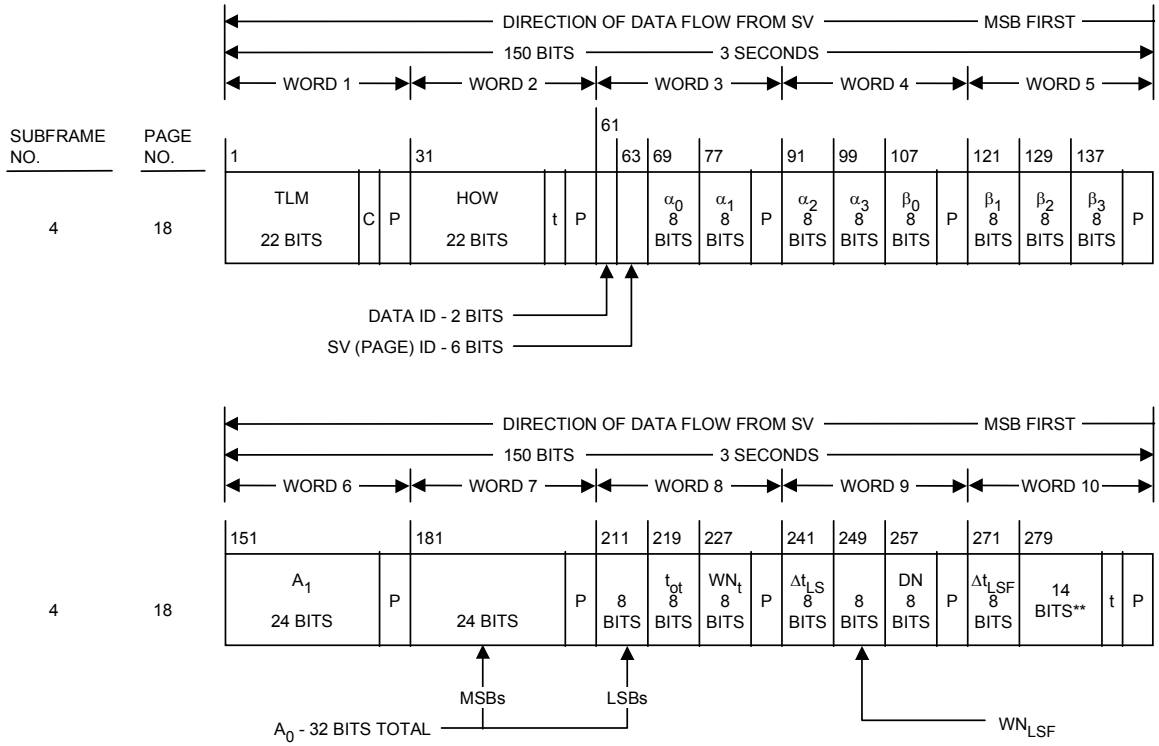

** RESERVED FOR SYSTEM USE
P = 6 PARITY BITS
t = 2 NONINFORMATION BEARING BITS USED FOR PARITY COMPUTATION (SEE PARAGRAPH 20.3.5)
C = TLM BITS 23 AND 24 WHICH ARE RESERVED

Figure 20-1. Data Format (sheet 8 of 11)

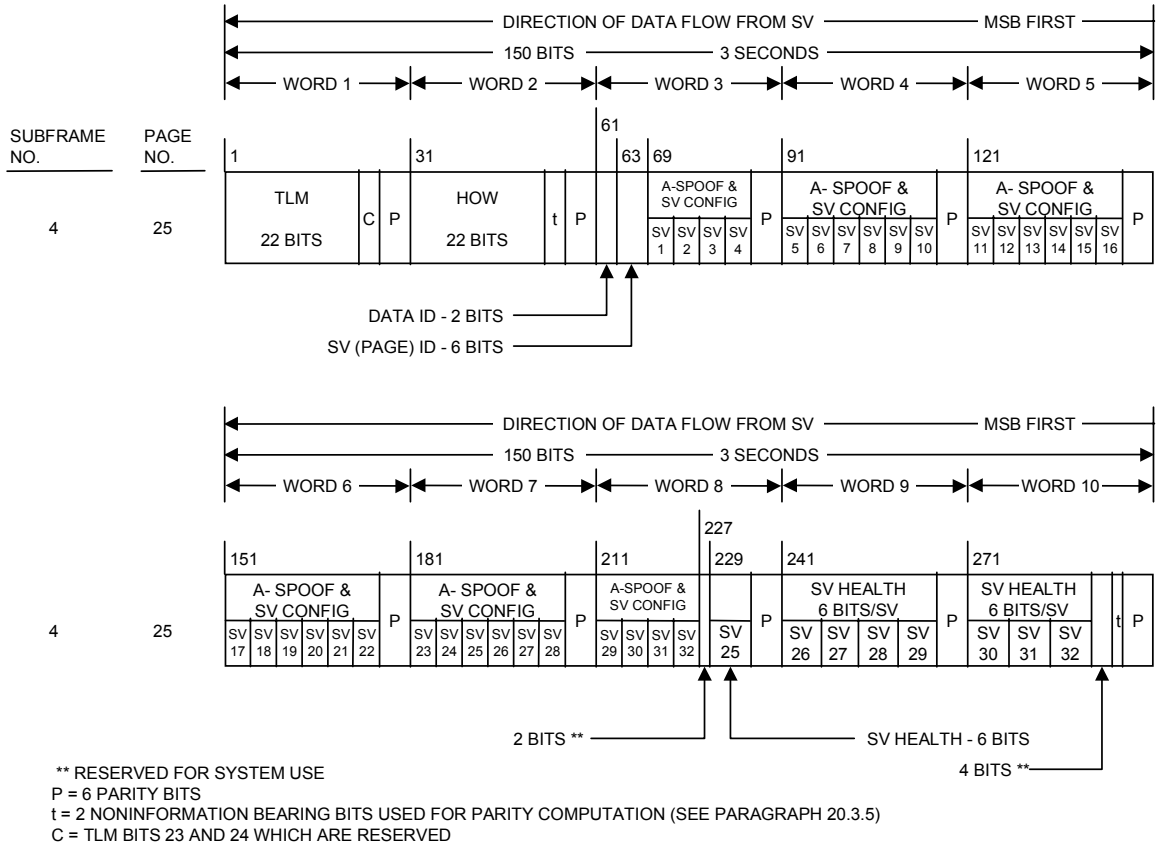

** RESERVED FOR SYSTEM USE
P = 6 PARITY BITS
t = 2 NONINFORMATION BEARING BITS USED FOR PARITY COMPUTATION (SEE PARAGRAPH 20.3.5)
C = TLM BITS 23 AND 24 WHICH ARE RESERVED

Figure 20-1. Data Format (sheet 9 of 11)

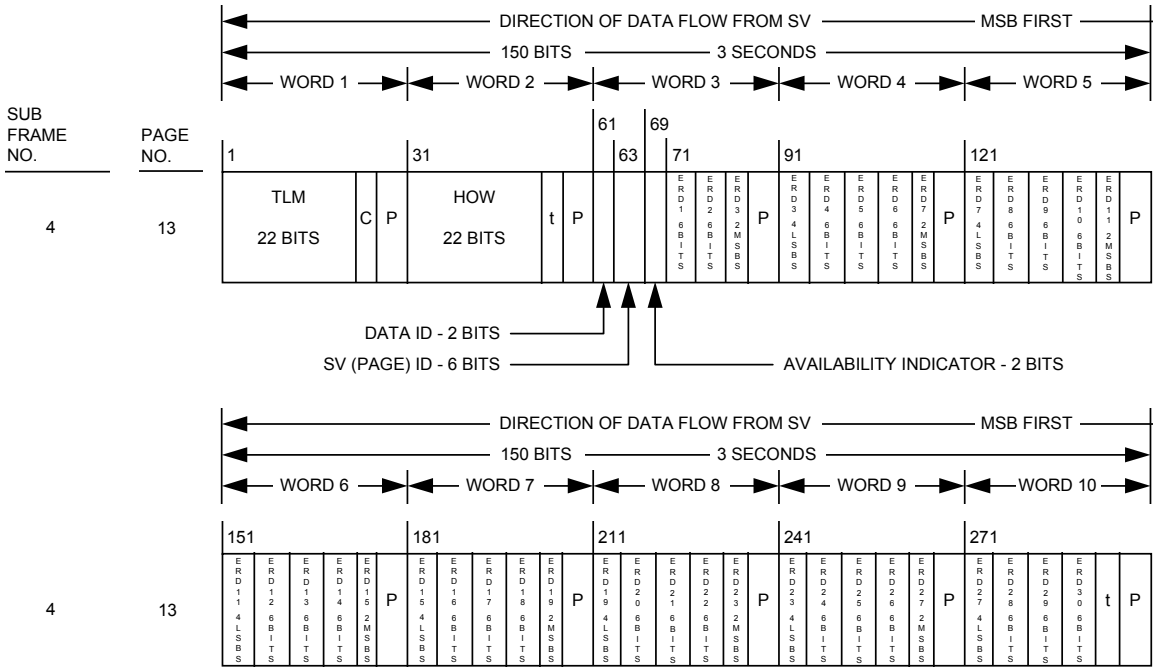

P = 6 PARITY BITS
t = 2 NONINFORMATION BEARING BITS USED FOR PARITY COMPUTATION (SEE PARAGRAPH 20.3.5)
C = TLM BITS 23 AND 24 WHICH ARE RESERVED

Figure 20-1. Data Format (sheet 10 of 11)

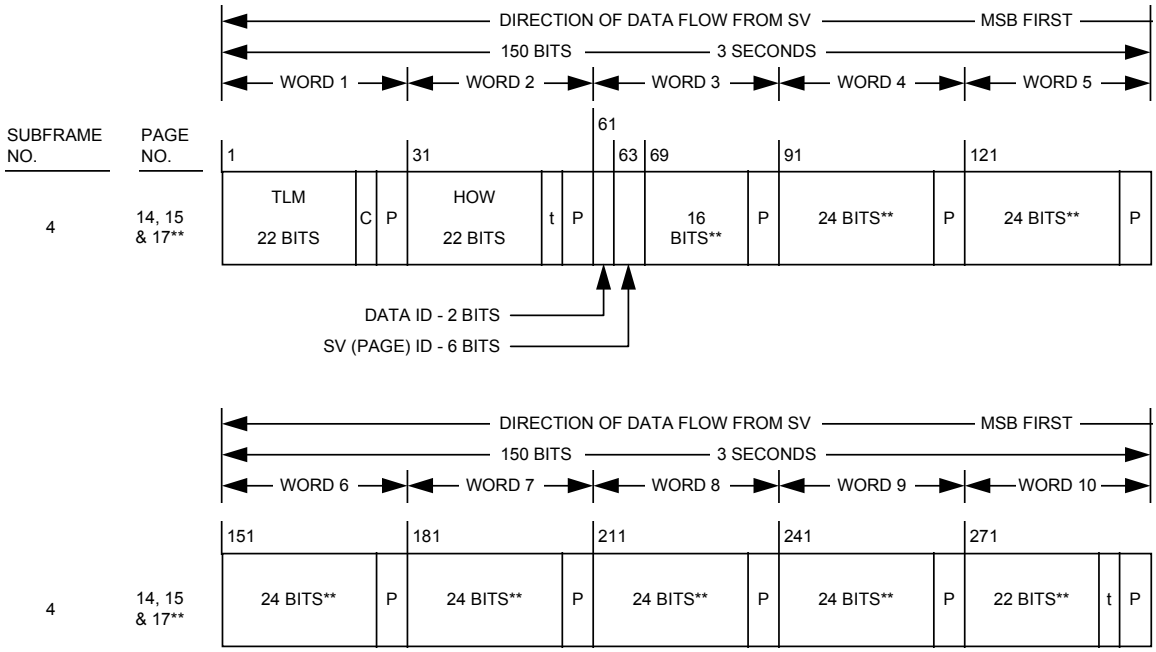

** THE INDICATED PORTIONS OF WORDS 3 THROUGH 10 OF PAGES 14 AND 15 ARE RESERVED FOR SYSTEM USE, WHILE THOSE OF PAGE 17 ARE RESERVED FOR SPECIAL MESSAGES PER PARAGRAPH 20.3.3.5.1.10
P = 6 PARITY BITS
t = 2 NONINFORMATION BEARING BITS USED FOR PARITY COMPUTATION (SEE PARAGRAPH 20.3.5)
C = TLM BITS 23 AND 24 WHICH ARE RESERVED

Figure 20-1. Data Format (sheet 11 of 11)

(This page intentionally left blank.)

20.3.3 Message Content. The format and contents of the TLM word and the HOW, as well as those of words three through ten of each subframe/page, are described in the following subparagraphs. The timing of the subframes and pages is covered in Section 20.3.4.

20.3.3.1 Telemetry Word. Each TLM word is 30 bits long, occurs every six seconds in the data frame, and is the first word in each subframe/page. The format shall be as shown in Figure 20-2. Bit 1 is transmitted first. Each TLM word shall begin with a preamble, followed by the TLM message, two reserved bits, and six parity bits. The TLM message contains information needed by the authorized user and by the CS, as described in the related SS/CS interface documentation.

20.3.3.2 Handover Word (HOW). The HOW shall be 30 bits long and shall be the second word in each subframe/page, immediately following the TLM word. A HOW occurs every 6 seconds in the data frame. The format and content of the HOW shall be as shown in Figure 20-2. The MSB is transmitted first. The HOW begins with the 17 MSBs of the time-of-week (TOW) count. (The full TOW count consists of the 19 LSBs of the 29-bit Z-count). These 17 bits correspond to the TOW-count at the X1 epoch which occurs at the start (leading edge) of the next following subframe (reference paragraph 3.3.4).

Bit 18 is an "alert" flag. When this flag is raised (bit 18 = "1"), it shall indicate to the unauthorized user that the SV URA may be worse than indicated in subframe 1 and that he shall use that SV at his own risk.

Bit 19 is an anti-spoof (A-S) flag. A "1" in bit-position 19 indicates that the A-S mode is ON in that SV.

Bits 20, 21, and 22 of the HOW provide the ID of the subframe in which that particular HOW is the second word; the ID code shall be as follows:

Subframe	ID Code
1	001
2	010
3	011
4	100
5	101

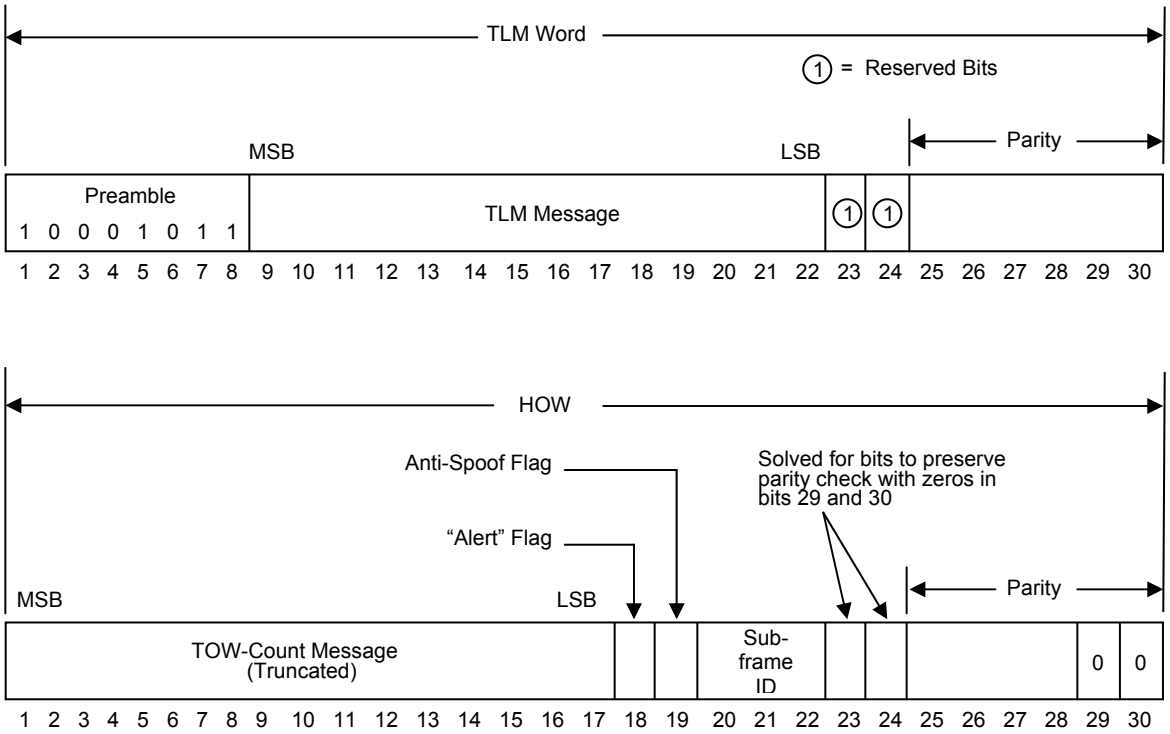

Figure 20-2. TLM and HOW Formats

20.3.3.3 Subframe 1. The content of words three through ten of subframe 1 are defined below, followed by related algorithms and material pertinent to use of the data.

20.3.3.3.1 Subframe 1 Content. The third through tenth words of subframe 1 shall each contain six parity bits as their LSBs; in addition, two non-information bearing bits shall be provided as bits 23 and 24 of word ten for parity computation purposes. The remaining 190 bits of words three through ten shall contain the clock parameters and other data described in the following.

The clock parameters describe the SV time scale during the period of validity. The parameters in a data set shall be valid during the interval of time in which they are transmitted and shall remain valid for an additional period of time after transmission of the next data set has started. The timing information for subframes, pages, and data sets is covered in Section 20.3.4.

20.3.3.3.1.1 Transmission Week Number. The ten MSBs of word three shall contain the ten MSBs of the 29-bit Z-count as qualified herein. These ten bits shall be a modulo 1024 binary representation of the current GPS week number at the start of the data set transmission interval (see paragraph 3.3.4(b)). The GPS week number increments at each end/start of week epoch. For Block II SVs in long-term extended operations, beginning approximately 28 days after upload, the transmission week number may not correspond to the actual GPS week number due to curve fit intervals that cross week boundaries.

20.3.3.3.1.2 Code(s) on L2 Channel. Bits 11 and 12 of word three shall indicate which code(s) is (are) commanded ON for the L2 channel, as follows:

00	=	Reserved,
01	=	P code ON,
10	=	C/A code ON.

20.3.3.3.1.3 SV Accuracy. Bits 13 through 16 of word three shall give the URA index of the SV (reference paragraph 6.2.1) for the unauthorized user. Except for Block IIR/IIR-M SVs in the Autonav mode, the URA index (N) is an integer in the range of 0 through 15 and has the following relationship to the URA of the SV:

URA INDEX	URA (meters)		
0	0.00	< URA ≤	2.40
1	2.40	< URA ≤	3.40
2	3.40	< URA ≤	4.85
3	4.85	< URA ≤	6.85
4	6.85	< URA ≤	9.65
5	9.65	< URA ≤	13.65
6	13.65	< URA ≤	24.00
7	24.00	< URA ≤	48.00
8	48.00	< URA ≤	96.00
9	96.00	< URA ≤	192.00
10	192.00	< URA ≤	384.00
11	384.00	< URA ≤	768.00
12	768.00	< URA ≤	1536.00
13	1536.00	< URA ≤	3072.00
14	3072.00	< URA ≤	6144.00
15	6144.00	< URA	(or no accuracy prediction is available - unauthorized users are advised to use the SV at their own risk.)

For each URA index (N), users may compute a nominal URA value (X) as given by:

- If the value of N is 6 or less, $X = 2^{(1 + N/2)}$,
- If the value of N is 6 or more, but less than 15, $X = 2^{(N - 2)}$,
- N = 15 shall indicate the absence of an accuracy prediction and shall advise the unauthorized user to use that SV at his own risk.

For N = 1, 3, and 5, X should be rounded to 2.8, 5.7, and 11.3 meters, respectively.

For Block IIR/IIR-M SVs in the Autonav mode, the URA shall be defined to mean “no better than X meters”, with “X” as defined above for each URA index

20.3.3.3.1.4 SV Health. The six-bit health indication given by bits 17 through 22 of word three refers to the transmitting SV. The MSB shall indicate a summary of the health of the NAV data, where

0 = all NAV data are OK,

1 = some or all NAV data are bad.

The five LSBs shall indicate the health of the signal components in accordance with the codes given in paragraph 20.3.3.5.1.3. The health indication shall be given relative to the "as designed" capabilities of each SV (as designated by the configuration code - see paragraph 20.3.3.5.1.4). Accordingly, any SV which does not have a certain capability will be indicated as "healthy" if the lack of this capability is inherent in its design or if it has been configured into a mode which is normal from a user standpoint and does not require that capability.

Additional SV health data are given in subframes 4 and 5. The data given in subframe 1 may differ from that shown in subframes 4 and/or 5 of other SVs since the latter may be updated at a different time.

20.3.3.3.1.5 Issue of Data, Clock (IODC). Bits 23 and 24 of word three in subframe 1 shall be the two MSBs of the ten-bit IODC term; bits one through eight of word eight in subframe 1 shall contain the eight LSBs of the IODC. The IODC indicates the issue number of the data set and thereby provides the user with a convenient means of detecting any change in the correction parameters. Constraints on the IODC as well as the relationship between the IODC and the IODE (issue of data, ephemeris) terms are defined in paragraph 20.3.4.4.

Short-term and Long-term Extended Operations. Whenever the fit interval flag indicates a fit interval greater than 4 hours, the IODC can be used to determine the actual fit interval of the data set (reference section 20.3.4.4).

20.3.3.3.1.6 Data Flag for L2 P-Code. When bit 1 of word four is a "1", it shall indicate that the NAV data stream was commanded OFF on the P-code of the L2 channel.

20.3.3.3.1.7 Estimated Group Delay Differential. Bits 17 through 24 of word seven contain the L1-L2 correction term, T_{GD}, for the benefit of "L1 only" or "L2 only" users; the related user algorithm is given in paragraph 20.3.3.3.3.

20.3.3.3.1.8 SV Clock Correction. Bits nine through 24 of word eight, bits one through 24 of word nine, and bits one through 22 of word ten contain the parameters needed by the users for apparent SV clock correction (t_{oc}, a_{f2}, a_{f1}, a_{f0}). The related algorithm is given in paragraph 20.3.3.3.3.

20.3.3.3.2 Subframe 1 Parameter Characteristics. For those parameters whose characteristics are not fully defined in Section 20.3.3.3.1, the number of bits, the scale factor of the LSB (which shall be the last bit received), the range, and the units shall be as specified in Table 20-I.

20.3.3.3.3 User Algorithms for Subframe 1 Data. The algorithms defined below (a) allow all users to correct the code phase time received from the SV with respect to both SV code phase offset and relativistic effects, (b) permit the "single frequency" (L1 or L2) user to compensate for the effects of SV group delay differential (the user who utilizes both frequencies does not require this correction, since the clock parameters account for the induced effects), and (c) allow the "two frequency" (L1 and L2) user to correct for the group propagation delay due to ionospheric effects (the single frequency user may correct for ionospheric effects as described in paragraph 20.3.3.5.2.5).

Table 20-I. Subframe 1 Parameters				
Parameter	No. of Bits**	Scale Factor (LSB)	Effective Range***	Units
Code on L2	2	1		discretes
Week No.	10	1		week
L2 P data flag	1	1		discrete
SV accuracy	4			(see text)
SV health	6	1		discretes
T_{GD}	8*	2^{-31}		seconds
IODC	10			(see text)
t_{oc}	16	2^{4}	604,784	seconds
a_{f2}	8*	2^{-55}		sec/sec^2
a_{f1}	16*	2^{-43}		sec/sec
a_{f0}	22*	2^{-31}		seconds

* Parameters so indicated shall be two's complement, with the sign bit (+ or -) occupying the MSB;

** See Figure 20-1 for complete bit allocation in subframe;

*** Unless otherwise indicated in this column, effective range is the maximum range attainable with indicated bit allocation and scale factor.

20.3.3.3.3.1 User Algorithm for SV Clock Correction. The polynomial defined in the following allows the user to determine the effective SV PRN code phase offset referenced to the phase center of the antennas (Δt_{sv}) with respect to GPS system time (t) at the time of data transmission. The coefficients transmitted in subframe 1 describe the offset apparent to the two-frequency user for the interval of time in which the parameters are transmitted. This estimated correction accounts for the deterministic SV clock error characteristics of bias, drift and aging, as well as for the SV implementation characteristics of group delay bias and mean differential group delay. Since these coefficients do not include corrections for relativistic effects, the user's equipment must determine the requisite relativistic correction. Accordingly, the offset given below includes a term to perform this function.

The user shall correct the time received from the SV with the equation (in seconds)

$$t = t_{sv} - \Delta t_{sv} \tag{1}$$

where

t = GPS system time (seconds),

t_{sv} = effective SV PRN code phase time at message transmission time (seconds),

Δt_{sv} = SV PRN code phase time offset (seconds).

The SV PRN code phase offset is given by

$$\Delta t_{sv} = a_{f0} + a_{f1}(t - t_{oc}) + a_{f2}(t - t_{oc})^2 + \Delta t_r \tag{2}$$

where

a_{f0}, a_{f1} and a_{f2} are the polynomial coefficients given in subframe 1, t_{oc} is the clock data reference time in seconds (reference paragraph 20.3.4.5), and Δt_r is the relativistic correction term (seconds) which is given by

$$\Delta t_r = F\, e \sqrt{A}\ \sin E_k.$$

The orbit parameters (e, $\sqrt{A}$, E_k) used here are described in discussions of data contained in subframes 2 and 3, while F is a constant whose value is

$$F = \frac{-2\sqrt{\mu}}{c^2} = -4.442807633\,(10)^{-10}\ \frac{\text{sec}}{\sqrt{\text{meter}}},$$

where

$$\mu = 3.986005 \times 10^{14} \frac{\text{meters}^3}{\text{second}^2} \quad = \quad \text{value of Earth's universal gravitational parameters}$$

$$c = 2.99792458 \times 10^{8} \frac{\text{meters}}{\text{second}} \quad = \quad \text{speed of light.}$$

Note that equations (1) and (2), as written, are coupled. While the coefficients a_{f0}, a_{f1} and a_{f2} are generated by using GPS time as indicated in equation (2), sensitivity of t_{sv} to t is negligible. This negligible sensitivity will allow the user to approximate t by t_{SV} in equation (2). The value of t must account for beginning or end of week crossovers. That is, if the quantity $t - t_{oc}$ is greater than 302,400 seconds, subtract 604,800 seconds from t. If the quantity $t - t_{oc}$ is less than -302,400 seconds, add 604,800 seconds to t.

The control segment will utilize the following alternative but equivalent expression for the relativistic effect when estimating the NAV parameters:

$$\Delta t_r = -\frac{2\,\vec{R} \bullet \vec{V}}{c^2}$$

where

$\vec{R}$ is the instantaneous position vector of the SV,

$\vec{V}$ is the instantaneous velocity vector of the SV, and

c is the speed of light. (Reference paragraph 20.3.4.3).

It is immaterial whether the vectors $\vec{R}$ and $\vec{V}$ are expressed in earth-fixed, rotating coordinates or in earth-centered, inertial coordinates.

20.3.3.3.3.2 L1 - L2 Correction. The L1 and L2 correction term, T_{GD}, is initially calculated by the CS to account for the effect of SV group delay differential between L1 P(Y) and L2 P(Y) based on measurements made by the SV contractor during SV manufacture. The value of T_{GD} for each SV may be subsequently updated to reflect the actual on-orbit group delay differential. This correction term is only for the benefit of "single-frequency" (L1 P(Y) or L2 P(Y)) users; it is necessitated by the fact that the SV clock offset estimates reflected in the a_{f0} clock correction coefficient (see paragraph 20.3.3.3.3.1) are based on the effective PRN code phase as apparent with two frequency (L1 P(Y) and L2 P(Y)) ionospheric corrections. Thus, the user who utilizes the L1 P(Y) signal only shall modify the code phase offset in accordance with paragraph 20.3.3.3.3.1 with the equation

$$(\Delta t_{SV})_{L1P(Y)} = \Delta t_{SV} - T_{GD}$$

where T_{GD} is provided to the user as subframe 1 data. For the user who utilizes L2 P(Y) only, the code phase modification is given by

$$(\Delta t_{SV})_{L2P(Y)} = \Delta t_{SV} - \gamma T_{GD}$$

where, denoting the nominal center frequencies of L1 and L2 as f_{L1} and f_{L2} respectively,

$$\gamma = (f_{L1}/f_{L2})^2 = (1575.42/1227.6)^2 = (77/60)^2.$$

The value of T_{GD} is not equal to the mean SV group delay differential, but is a measured value that represents the mean group delay differential multiplied by $1/(1-\gamma)$. That is,

$$T_{GD} = \frac{1}{1-\gamma} (t_{L1P(Y)} - t_{L2P(Y)})$$

where $t_{LiP(Y)}$ is the GPS time the ith frequency P(Y) signal (a specific epoch of the signal) is transmitted from the SV antenna phase center.

20.3.3.3.3.3 Ionospheric Correction. The two frequency (L1 P(Y) and L2 P(Y)) user shall correct for the group delay due to ionospheric effects by applying the relationship:

$$PR = \frac{PR_{L2P(Y)} - \gamma PR_{L1P(Y)}}{1 - \gamma}$$

where

PR	=	pseudorange corrected for ionospheric effects,
PR_i	=	pseudorange measured on the channel indicated by the subscript.

and γ is as defined in paragraph 20.3.3.3.3.2. The clock correction coefficients are based on "two frequency" measurements and therefore account for the effects of mean differential delay in SV instrumentation.

20.3.3.3.3.4 Example Application of Correction Parameters. A typical system application of the correction parameters for a user receiver is shown in Figure 20-3. The ionospheric model referred to in Figure 20-3 is discussed in paragraph 20.3.3.5.2.5 in conjunction with the related data contained in page 18 of subframe 4. The $\frac{ERD}{c}$ term referred to in Figure 20-3 is discussed in paragraph 20.3.3.5.2.6 in conjunction with the related data contained in page 13 of subframe 4.

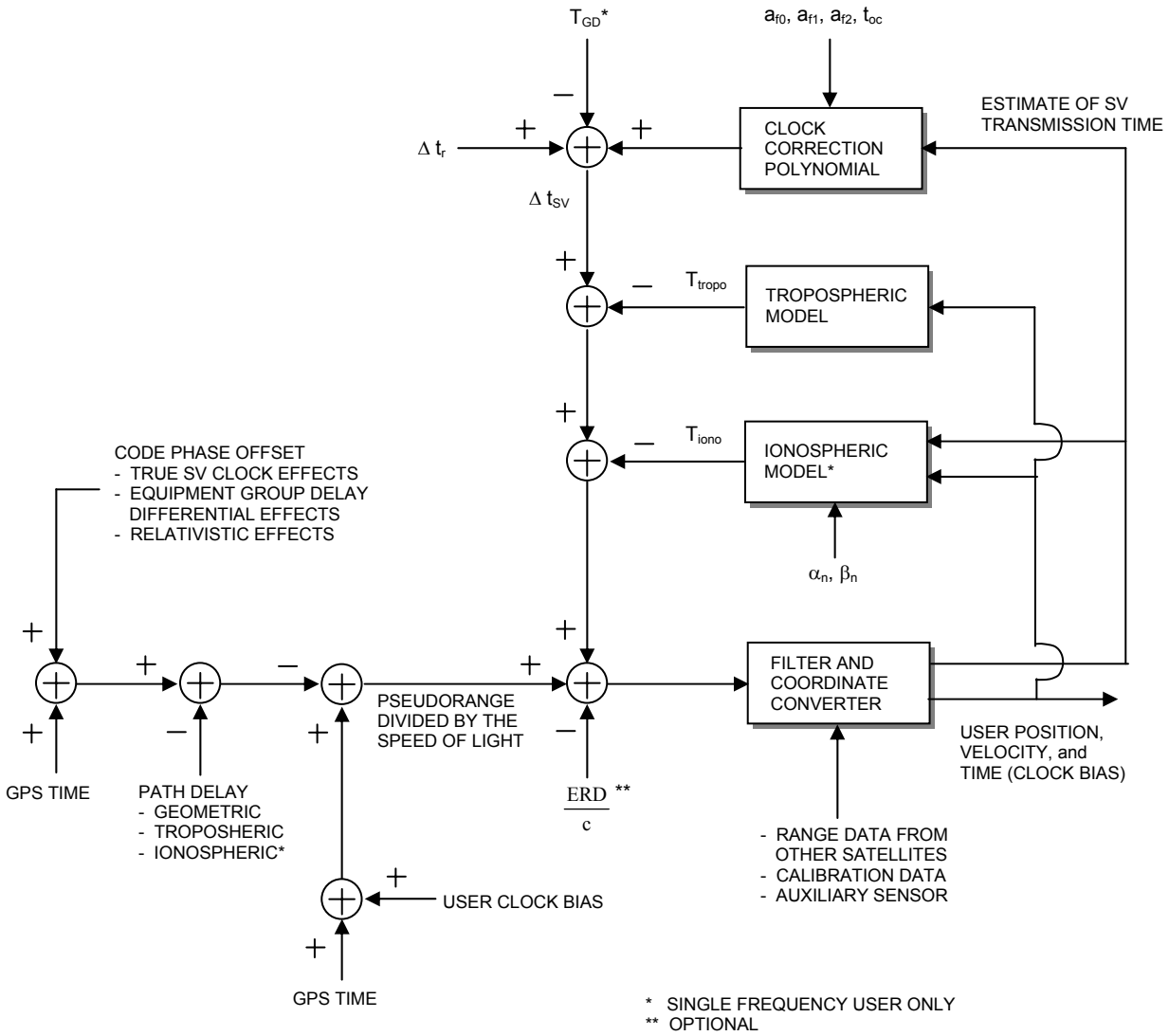

Figure 20-3. Sample Application of Correction Parameters

20.3.3.4 Subframes 2 and 3. The contents of words three through ten of subframes 2 and 3 are defined below, followed by material pertinent to the use of the data.

20.3.3.4.1 Content of Subframes 2 and 3. The third through tenth words of subframes 2 and 3 shall each contain six parity bits as their LSBs; in addition, two non-information bearing bits shall be provided as bits 23 and 24 of word ten of each subframe for parity computation purposes. Bits 288 through 292 of subframe 2 shall contain the Age of Data Offset (AODO) term for the navigation message correction table (NMCT) contained in subframe 4 (reference paragraph 20.3.3.5.1.9). The remaining 375 bits of those two subframes shall contain the ephemeris representation parameters of the transmitting SV.

The ephemeris parameters describe the orbit during the curve fit intervals described in section 20.3.4. Table 20-II gives the definition of the orbital parameters using terminology typical of Keplerian orbital parameters; it shall be noted, however, that the transmitted parameter values are such that they provide the best trajectory fit in Earth-Centered, Earth-Fixed (ECEF) coordinates for each specific fit interval. The user shall not interpret intermediate coordinate values as pertaining to any conventional coordinate system.

The issue of ephemeris data (IODE) term shall provide the user with a convenient means for detecting any change in the ephemeris representation parameters. The IODE is provided in both subframes 2 and 3 for the purpose of comparison with the 8 LSBs of the IODC term in subframe 1. Whenever these three terms do not match, a data set cutover has occurred and new data must be collected. The timing of the IODE and constraints on the IODC and IODE are defined in paragraph 20.3.4.4.

Any change in the subframe 2 and 3 data will be accomplished with a simultaneous change in both IODE words. The CS shall assure that the t_{oe} value, for at least the first data set transmitted by an SV after an upload, is different from that transmitted prior to the cutover (reference paragraph 20.3.4.5).

A "fit interval" flag is provided in subframe 2 to indicate whether the ephemerides are based on a four-hour fit interval or a fit interval greater than four hours (reference paragraph 20.3.3.4.3.1).

The AODO word is provided in subframe 2 to enable the user to determine the validity time for the NMCT data provided in subframe 4 of the transmitting SV. The related algorithm is given in paragraph 20.3.3.4.4.

Table 20-II. Ephemeris Data Definitions	
M_0	Mean Anomaly at Reference Time
Δn	Mean Motion Difference From Computed Value
e	Eccentricity
$\sqrt{A}$	Square Root of the Semi-Major Axis
Ω_0	Longitude of Ascending Node of Orbit Plane at Weekly Epoch
i_0	Inclination Angle at Reference Time
ω	Argument of Perigee
$\dot{\Omega}$	Rate of Right Ascension
IDOT	Rate of Inclination Angle
C_{uc}	Amplitude of the Cosine Harmonic Correction Term to the Argument of Latitude
C_{us}	Amplitude of the Sine Harmonic Correction Term to the Argument of Latitude
C_{rc}	Amplitude of the Cosine Harmonic Correction Term to the Orbit Radius
C_{rs}	Amplitude of the Sine Harmonic Correction Term to the Orbit Radius
C_{ic}	Amplitude of the Cosine Harmonic Correction Term to the Angle of Inclination
C_{is}	Amplitude of the Sine Harmonic Correction Term to the Angle of Inclination
t_{oe}	Reference Time Ephemeris (reference paragraph 20.3.4.5)
IODE	Issue of Data (Ephemeris)

20.3.3.4.2 Subframe 2 and 3 Parameter Characteristics. For each ephemeris parameter contained in subframes 2 and 3, the number of bits, the scale factor of the LSB (which shall be the last bit received), the range, and the units shall be as specified in Table 20-III.

The AODO word (which is not an ephemeris parameter) is a five-bit unsigned term with an LSB scale factor of 900, a range from 0 to 31, and units of seconds.

20.3.3.4.3 User Algorithm for Ephemeris Determination. The user shall compute the ECEF coordinates of position for the phase center of the SVs' antennas utilizing a variation of the equations shown in Table 20-IV. Subframes 2 and 3 parameters are Keplerian in appearance; the values of these parameters, however, are produced by the CS via a least squares curve fit of the predicted ephemeris of the phase center of the SVs' antennas (time-position quadruples; t, x, y, z expressed in ECEF coordinates). Particulars concerning the periods of the curve fit, the resultant accuracy, and the applicable coordinate system are given in the following subparagraphs.

20.3.3.4.3.1 Curve Fit Intervals. Bit 17 in word 10 of subframe 2 is a "fit interval" flag which indicates the curve-fit interval used by the CS in determining the ephemeris parameters, as follows:

0 = 4 hours,
1 = greater than 4 hours.

The relationship of the curve-fit interval to transmission time and the timing of the curve-fit intervals is covered in section 20.3.4.

Table 20-III. Ephemeris Parameters				
Parameter	No. of Bits**	Scale Factor (LSB)	Effective Range***	Units
IODE	8			(see text)
C_{rs}	16*	2^{-5}		meters
Δn	16*	2^{-43}		semi-circles/sec
M_0	32*	2^{-31}		semi-circles
C_{uc}	16*	2^{-29}		radians
e	32	2^{-33}	0.03	dimensionless
C_{us}	16*	2^{-29}		radians
$\sqrt{A}$	32	2^{-19}		$\sqrt{\text{meters}}$
t_{oe}	16	2^{4}	604,784	seconds
C_{ic}	16*	2^{-29}		radians
Ω_0	32*	2^{-31}		semi-circles
C_{is}	16*	2^{-29}		radians
i_0	32*	2^{-31}		semi-circles
C_{rc}	16*	2^{-5}		meters
ω	32*	2^{-31}		semi-circles
$\dot{\Omega}$	24*	2^{-43}		semi-circles/sec
IDOT	14*	2^{-43}		semi-circles/sec

* Parameters so indicated shall be two's complement, with the sign bit (+ or -) occupying the MSB;
** See Figure 20-1 for complete bit allocation in subframe;
*** Unless otherwise indicated in this column, effective range is the maximum range attainable with indicated bit allocation and scale factor.

Table 20-IV. Elements of Coordinate Systems (sheet 1 of 2)	
$\mu = 3.986005 \times 10^{14}$ meters^3/sec^2	WGS 84 value of the earth's gravitational constant for GPS user
$\dot{\Omega}_e = 7.2921151467 \times 10^{-5}$ rad/sec	WGS 84 value of the earth's rotation rate
$A = \left(\sqrt{A}\right)^2$	Semi-major axis
$n_0 = \sqrt{\frac{\mu}{A^3}}$	Computed mean motion (rad/sec)
$t_k = t - t_{oe}$*	Time from ephemeris reference epoch
$n = n_0 + \Delta n$	Corrected mean motion
$M_k = M_0 + nt_k$	Mean anomaly
$M_k = E_k - e \sin E_k$	Kepler's Equation for Eccentric Anomaly (may be solved by iteration) (radians)
$\nu_k = \tan^{-1}\left\{\frac{\sin \nu_k}{\cos \nu_k}\right\}$ $= \tan^{-1}\left\{\frac{\sqrt{1-e^2}\sin E_k / (1 - e\cos E_k)}{(\cos E_k - e)/(1 - e\cos E_k)}\right\}$	True Anomaly

* t is GPS system time at time of transmission, i.e., GPS time corrected for transit time (range/speed of light). Furthermore, t_k shall be the actual total time difference between the time t and the epoch time t_{oe}, and must account for beginning or end of week crossovers. That is, if t_k is greater than 302,400 seconds, subtract 604,800 seconds from t_k. If t_k is less than -302,400 seconds, add 604,800 seconds to t_k.

Table 20-IV. Elements of Coordinate Systems (sheet 2 of 2)		
$E_k = \cos^{-1}\left\{\frac{e + \cos \nu_k}{1 + e \cos \nu_k}\right\}$		Eccentric Anomaly
$\Phi_k = \nu_k + \omega$		Argument of Latitude
$\delta u_k = c_{us}\sin 2\Phi_k + c_{uc}\cos 2\Phi_k$	Argument of Latitude Correction	Second Harmonic Perturbations
$\delta r_k = c_{rs}\sin 2\Phi_k + c_{rc}\cos 2\Phi_k$	Radius Correction	
$\delta i_k = c_{is}\sin 2\Phi_k + c_{ic}\cos 2\Phi_k$	Inclination Correction	
$u_k = \Phi_k + \delta u_k$		Corrected Argument of Latitude
$r_k = A(1 - e \cos E_k) + \delta r_k$		Corrected Radius
$i_k = i_0 + \delta i_k + (IDOT)\, t_k$		Corrected Inclination
$x_k' = r_k \cos u_k$ $y_k' = r_k \sin u_k$		Positions in orbital plane.
$\Omega_k = \Omega_0 + (\dot{\Omega} - \dot{\Omega}_e)\, t_k - \dot{\Omega}_e\, t_{oe}$		Corrected longitude of ascending node.
$x_k = x_k' \cos\Omega_k - y_k' \cos i_k \sin\Omega_k$ $y_k = x_k' \sin\Omega_k + y_k' \cos i_k \cos\Omega_k$ $z_k = y_k' \sin i_k$		Earth-fixed coordinates.

20.3.3.4.3.2 Parameter Sensitivity. The sensitivity of the SV's antenna phase center position to small perturbations in most ephemeris parameters is extreme. The sensitivity of position to the parameters $\sqrt{A}$, C_{rc} and C_{rs} is about one meter/meter. The sensitivity of position to the angular parameters is on the order of 10^8 meters/semicircle, and to the angular rate parameters is on the order of 10^{12} meters/semicircle/second. Because of this extreme sensitivity to angular perturbations, the value of π used in the curve fit is given here. π is a mathematical constant, the ratio of a circle's circumference to its diameter. Here π is taken as

$$\pi = 3.1415926535898.$$

20.3.3.4.3.3 Coordinate Systems.

20.3.3.4.3.3.1 ECEF Coordinate System. The equations given in Table 20-IV provide the SV's antenna phase center position in the WGS 84 ECEF coordinate system defined as follows:

Origin*	=	Earth's center of mass
Z-Axis**	=	The direction of the IERS (International Earth Rotation and Reference Systems Service) Reference Pole (IRP)
X-Axis	=	Intersection of the IERS Reference Meridian (IRM) and the plane passing through the origin and normal to the Z-axis
Y-Axis	=	Completes a right-handed, Earth-Centered, Earth-Fixed orthogonal coordinate system

* Geometric center of the WGS 84 Ellipsoid

** Rotational axis of the WGS 84 Ellipsoid

20.3.3.4.3.3.2 Earth-Centered, Inertial (ECI) Coordinate System. In an ECI coordinate system, GPS signals propagate in straight lines at the constant speed c* (reference paragraph 20.3.4.3). A stable ECI coordinate system of convenience may be defined as being coincident with the ECEF coordinate system at a given time t_0. The x, y, z coordinates in the ECEF coordinate system at some other time t can be transformed to the x′, y′, z′ coordinates in the selected ECI coordinate system of convenience by the simple** rotation:

$$x' = x\cos(\theta) - y\sin(\theta)$$
$$y' = x\sin(\theta) + y\cos(\theta)$$
$$z' = z$$

where

$$\theta = \dot{\Omega}_e (t - t_0)$$

* The propagation speed c is constant only in a vacuum. The gravitational potential also has a small effect on the propagation speed, but may be neglected by most users.

** Neglecting effects due to polar motion, nutation, and precession which may be neglected by most users for small values of $(t - t_0)$.

20.3.3.4.3.4 Geometric Range. The user shall account for the geometric range (D) from satellite to receiver in an ECI coordinate system. D may be expressed as,

$$D = |\vec{r}(t_R) - \vec{R}(t_T)|$$

where

t_T and t_R are the GPS system times of transmission and reception, respectively,

and where,

$\vec{R}(t_T)$ = position vector of the GPS satellite in the selected ECI coordinate system at time t_T,

$\vec{r}(t_R)$ = position vector of the receiver in the selected ECI coordinate system at time t_R.

20.3.3.4.4 NMCT Validity Time. Users desiring to take advantage of the NMCT data provided in page 13 of subframe 4 shall first examine the AODO term currently provided in subframe 2 of the NAV data from the transmitting SV. If the AODO term is 27900 seconds (i.e., binary 11111), then the NMCT currently available from the transmitting SV is invalid and shall not be used. If the AODO term is less than 27900 seconds, then the user shall compute the validity time for that NMCT (t_{nmct}) using the ephemeris t_{oe} parameter and the AODO term from the current subframe 2 as follows:

$$\text{OFFSET} = t_{oe} \text{ [modulo 7200]}$$

$$\text{if OFFSET} = 0, \text{ then } t_{nmct} = t_{oe} - \text{AODO}$$
$$\text{if OFFSET} > 0, \text{ then } t_{nmct} = t_{oe} - \text{OFFSET} + 7200 - \text{AODO}$$

Note that the foregoing computation of t_{nmct} must account for any beginning or end of week crossovers; for example,

$$\text{if } t^* - t_{nmct} > 302{,}400 \text{ then } t_{nmct} = t_{nmct} + 604{,}800$$
$$\text{if } t^* - t_{nmct} < -302{,}400 \text{ then } t_{nmct} = t_{nmct} - 604{,}800$$

* t is GPS system time at time of transmission.

Users are advised that different SVs will transmit NMCTs with different t_{nmct} and that the best performance will generally be obtained by applying data from the NMCT with the latest (largest) t_{nmct}. As a result, users should compute and examine the t_{nmct} values for all visible and available SVs in order to find and use the NMCT with the latest t_{nmct}. If the same latest (largest) t_{nmct} is provided by two or more visible and available SVs, then the NMCT from any SV with the latest t_{nmct} may be selected and used; however, the estimated range deviation (ERD) value provided by the selected NMCT for the other SVs with the same t_{nmct} shall be set to zero if those SVs are used in the positioning solution. It should be noted that the intended positioning solution accuracy improvement will not be obtained if the data from two different NMCTs are applied simultaneously or if the data from a given NMCT is applied to just a subset of the SVs used in the positioning solution (i.e., mixed mode operation results in potentially degraded solution accuracy).

It should be noted that the NMCT information shall be supported by the Block IIR SV only when operating in the IIA like mode of operation including the Autonav Test mode.

20.3.3.5 Subframes 4 and 5. Both subframe 4 and 5 are subcommutated 25 times each; the 25 versions of these subframes are referred to as pages 1 through 25 of each subframe. With the possible exception of "reserved for system use" pages and explicit repeats, each page contains different specific data in words three through ten. As shown in Figure 20-1, the pages of subframe 4 utilize seven different formats, while those of subframe 5 use two. The content of words three through ten of each page is described below, followed by algorithms and material pertinent to the use of the data.

20.3.3.5.1 Content of Subframes 4 and 5. Words three through ten of each page contain six parity bits as their LSBs; in addition, two non-information bearing bits are provided as bits 23 and 24 of word ten in each page for parity computation purposes. The data contained in the remaining bits of words three through ten of the various pages in subframes 4 and 5 are described in the following subparagraphs.

A brief summary of the various data contained in each page of subframes 4 and 5 is as follows:

a. Subframe 4:

- Pages 1, 6, 11, 16 and 21: (reserved);
- Pages 2, 3, 4, 5, 7, 8, 9 and 10: almanac data for SV 25 through 32 respectively;
- Pages 12, 19, 20, 22, 23 and 24: (reserved);
- Page 13: NMCT;
- Pages 14 and 15: reserved for system use;
- Page 17: special messages;
- Page 18: ionospheric and UTC data;
- Page 25: A-S flags/SV configurations for 32 SVs, plus SV health for SV 25 through 32.

b. Subframe 5:

- Pages 1 through 24: almanac data for SV 1 through 24;
- Page 25: SV health data for SV 1 through 24, the almanac reference time, the almanac reference week number.

20.3.3.5.1.1 Data ID and SV ID. The two MSBs of word three in each page shall contain data ID. Data ID number two (denoted by binary code 01) denotes the NAV data structure of D(t) which is described in this Appendix. Future data IDs will be defined as necessary.

As shown in Table 20-V, the data ID is utilized to provide one of two indications: (a) for those pages which are assigned to contain the almanac data of one specific SV, the data ID defines the data structure utilized by that SV whose almanac data are contained in that page; and (b) for all other pages, the data ID denotes the data structure of the transmitting SV.

The SV ID is given by bits three through eight of word three in each page as shown in Table 20-V. Specific IDs are reserved for each page of subframes 4 and 5. The SV IDs are utilized in two different ways: (a) for those pages which contain the almanac data of a given SV, the SV ID is the same number that is assigned to the PRN code phase of that SV (reference Table 3-I), and (b) for all other pages the SV ID assigned in accordance with Table 20-V serves as the "page ID". IDs 1 through 32 are assigned to those pages which contain the almanac data of specific SVs (pages 1-24 of subframe 5 and pages 2-5 and 7-10 of subframe 4). The "0" ID (binary all zeros) is assigned to indicate a dummy SV, while IDs 51 through 63 are utilized for pages containing other than almanac data of a specific SV. The remaining IDs (33 through 50) are unassigned.

Pages which carry the same SV ID (e.g., in subframe 4, pages 1, 6, 11, 16 and 21 carry an ID of 57, while pages 12 and 24 are designated by an ID of 62) may not be considered to contain identical data. The data in the pages with the same SV ID can be different.

Table 20-V. Data IDs and SV IDs in Subframes 4 and 5				
Page	Subframe 4		Subframe 5	
	Data ID	SV ID*	Data ID	SV ID*
1	Note(2)	57	Note(1)	1
2	Note(1)	25	Note(1)	2
3	Note(1)	26	Note(1)	3
4	Note(1)	27	Note(1)	4
5	Note(1)	28	Note(1)	5
6	Note(2)	57	Note(1)	6
7	Note(1)	29	Note(1)	7
8	Note(1)	30	Note(1)	8
9	Note(1)	31	Note(1)	9
10	Note(1)	32	Note(1)	10
11	Note(2)	57	Note(1)	11
12	Note(2)	62	Note(1)	12
13	Note(2)	52	Note(1)	13
14	Note(2)	53	Note(1)	14
15	Note(2)	54	Note(1)	15
16	Note(2)	57	Note(1)	16
17	Note(2)	55	Note(1)	17
18	Note(2)	56	Note(1)	18
19	Note(2)	58 Note(3)	Note(1)	19
20	Note(2)	59 Note(3)	Note(1)	20
21	Note(2)	57	Note(1)	21
22	Note(2)	60 Note(3)	Note(1)	22
23	Note(2)	61 Note(3)	Note(1)	23
24	Note(2)	62	Note(1)	24
25	Note(2)	63	Note(2)	51

* Use "0" to indicate "dummy" SV. When using "0" to indicate dummy SV, use the data ID of the transmitting SV.

Note 1: Data ID of that SV whose SV ID appears in that page.
Note 2: Data ID of transmitting SV.
Note 3: SV ID may vary (except for IIR/IIR-M/IIF SVs).

20.3.3.5.1.2 Almanac Data. Pages 1 through 24 of subframe 5, as well as pages 2 through 5 and 7 through 10 of subframe 4 contain the almanac data and a SV health word for up to 32 SVs (the health word is discussed in paragraph 20.3.3.5.1.3). The almanac data are a reduced-precision subset of the clock and ephemeris parameters. The data occupy all bits of words three through ten of each page except the eight MSBs of word three (data ID and SV ID), bits 17 through 24 of word five (SV health), and the 50 bits devoted to parity. The number of bits, the scale factor (LSB), the range, and the units of the almanac parameters are given in Table 20-VI. The algorithms and other material related to the use of the almanac data are given in paragraph 20.3.3.5.2.

The almanac message for any dummy SVs shall contain alternating ones and zeros with valid parity.

The almanac parameters shall be updated by the CS at least once every 6 days while the CS is able to upload the SVs. If the CS is unable to upload the SVs, the accuracy of the almanac parameters transmitted by the SVs will degrade over time.

For Block II and IIA SVs, three sets of almanac shall be used to span at least 60 days. The first and second sets will be transmitted for up to six days each; the third set is intended to be transmitted for the remainder of the 60 days minimum, but the actual duration of transmission will depend on the individual SV's capability to retain data in memory. All three sets are based on six-day curve fits that correspond to the first six days of the transmission interval. For Block IIR/IIR-M and IIF SVs, multiple sets of almanac parameters shall be uploaded to span at least 60 days.

Table 20-VI. Almanac Parameters				
Parameter	No. of Bits**	Scale Factor (LSB)	Effective Range***	Units
e	16	2^{-21}		dimensionless
t_{oa}	8	2^{12}	602,112	seconds
δ_i****	16*	2^{-19}		semi-circles
$\dot{\Omega}$	16*	2^{-38}		semi-circles/sec
$\sqrt{A}$	24	2^{-11}		$\sqrt{\text{meters}}$
Ω_0	24*	2^{-23}		semi-circles
ω	24*	2^{-23}		semi-circles
M_0	24*	2^{-23}		semi-circles
a_{f0}	11*	2^{-20}		seconds
a_{f1}	11*	2^{-38}		sec/sec

* Parameters so indicated shall be two's complement with the sign bit (+ or -) occupying the MSB;

** See Figure 20-1 for complete bit allocation in subframe;

*** Unless otherwise indicated in this column, effective range is the maximum range attainable with indicated bit allocation and scale factor;

**** Relative to i_0 = 0.30 semi-circles.

20.3.3.5.1.3 SV Health. Subframes 4 and 5 contain two types of SV health data: (a) each of the 32 pages which contain the clock/ephemeris related almanac data provide an eight-bit SV health status word regarding the SV whose almanac data they carry, and (b) the 25th page of subframe 4 and of subframe 5 jointly contain six-bit health status data for up to 32 SVs.

The three MSBs of the eight-bit health words indicate health of the NAV data in accordance with the code given in Table 20-VII. The six-bit words provide a one-bit summary of the NAV data's health status in the MSB position in accordance with paragraph 20.3.3.3.1.4. The five LSBs of both the eight-bit and the six-bit words provide the health status of the SV's signal components in accordance with the code given in Table 20-VIII. A special meaning is assigned, however, to the "6 ones" combination of the six-bit health words in the 25th page of subframes 4 and 5: it indicates that "the SV which has that ID is not available and there may be no data regarding that SV in that page of subframes 4 and 5 that is assigned to normally contain the almanac data of that SV" (NOTE: this special meaning applies to the 25th page of subframes 4 and 5 only). The health indication shall be given relative to the "as designed" capabilities of each SV (as designated by the configuration code -- see paragraph 20.3.3.5.1.4). Accordingly, any SV which does not have a certain capability will be indicated as "healthy" if the lack of this capability is inherent in its design or it has been configured into a mode which is normal from a user standpoint and does not require that capability.

Additional SV health data are given in subframe 1. The data given in subframes 1, 4, and 5 of the other SVs may differ from that shown in subframes 4 and/or 5 since the latter may be updated at a different time.

The eight-bit health status words shall occupy bits 17 through 24 of word five in those 32 pages which contain almanac data for individual SVs. The six-bit health status words shall occupy the 24 MSBs of words four through nine in page 25 of subframe 5 plus bits 19 through 24 of word 8, the 24 MSBs of word 9, and the 18 MSBs of word 10 in page 25 of subframe 4.

The predicted health data will be updated at the time of upload when a new almanac has been built by the CS. The transmitted health data may not correspond to the actual health of the transmitting SV or other SVs in the constellation.

Table 20-VII. NAV Data Health Indications			
Bit Position in Page			Indication
137	138	139	
0	0	0	ALL DATA OK
0	0	1	PARITY FAILURE -- some or all parity bad
0	1	0	TLM/HOW FORMAT PROBLEM -- any departure from standard format (e.g., preamble misplaced and/or incorrect, etc.), except for incorrect Z-count, as reported in HOW
0	1	1	Z-COUNT IN HOW BAD -- any problem with Z-count value not reflecting actual code phase
1	0	0	SUBFRAMES 1, 2, 3 -- one or more elements in words three through ten of one or more subframes are bad
1	0	1	SUBFRAMES 4, 5 -- one or more elements in words three through ten of one or more subframes are bad
1	1	0	ALL UPLOADED DATA BAD -- one or more elements in words three through ten of any one (or more) subframes are bad
1	1	1	ALL DATA BAD -- TLM word and/or HOW and one or more elements in any one (or more) subframes are bad

Table 20-VIII. Codes for Health of SV Signal Components	
MSB LSB	Definition
0 0 0 0 0	All Signals OK
0 0 0 0 1	All Signals Weak*
0 0 0 1 0	All Signals Dead
0 0 0 1 1	All Signals Have No Data Modulation
0 0 1 0 0	L1 P Signal Weak
0 0 1 0 1	L1 P Signal Dead
0 0 1 1 0	L1 P Signal Has No Data Modulation
0 0 1 1 1	L2 P Signal Weak
0 1 0 0 0	L2 P Signal Dead
0 1 0 0 1	L2 P Signal Has No Data Modulation
0 1 0 1 0	L1 C Signal Weak
0 1 0 1 1	L1 C Signal Dead
0 1 1 0 0	L1 C Signal Has No Data Modulation
0 1 1 0 1	L2 C Signal Weak
0 1 1 1 0	L2 C Signal Dead
0 1 1 1 1	L2 C Signal Has No Data Modulation
1 0 0 0 0	L1 & L2 P Signal Weak
1 0 0 0 1	L1 & L2 P Signal Dead
1 0 0 1 0	L1 & L2 P Signal Has No Data Modulation
1 0 0 1 1	L1 & L2 C Signal Weak
1 0 1 0 0	L1 & L2 C Signal Dead
1 0 1 0 1	L1 & L2 C Signal Has No Data Modulation
1 0 1 1 0	L1 Signal Weak*
1 0 1 1 1	L1 Signal Dead
1 1 0 0 0	L1 Signal Has No Data Modulation
1 1 0 0 1	L2 Signal Weak*
1 1 0 1 0	L2 Signal Dead
1 1 0 1 1	L2 Signal Has No Data Modulation
1 1 1 0 0	SV Is Temporarily Out (Do not use this SV during current pass)**
1 1 1 0 1	SV Will Be Temporarily Out (Use with caution)**
1 1 1 1 0	Spare
1 1 1 1 1	More Than One Combination Would Be Required To Describe Anomalies (Not including those marked with "**")

* 3 to 6 dB below specified power level due to reduced power output, excess phase noise, SV attitude, etc.
** See definition above for Health Code 11111.

20.3.3.5.1.4 Anti-Spoof (A-S) Flags and SV Configurations. Page 25 of subframe 4 shall contain a four-bit-long term for each of up to 32 SVs to indicate the A-S status and the configuration code of each SV. The MSB of each four-bit term shall be the A-S flag with a "1" indicating that A-S is ON. The three LSBs shall indicate the configuration of each SV using the following code:

Code	SV Configuration
001	"Block II/IIA/IIR" SV (A-S capability, plus flags for A-S and "alert" in HOW; memory capacity as described in paragraph 20.3.2).
010	"Block IIR-M" SV
011	"Block IIF" SV

Additional codes will be assigned in the future, should the need arise.

These four-bit terms shall occupy bits 9 through 24 of word three, the 24 MSBs of words four through seven, and the 16 MSBs of word eight, all in page 25 of subframe 4.

Since the anti-spoof information is updated by the CS at the time of upload, the anti-spoof data may not correspond to the actual anti-spoof status of the transmitting SV or other SVs in the constellation.

20.3.3.5.1.5 Almanac Reference Week. Bits 17 through 24 of word three in page 25 of subframe 5 shall indicate the number of the week (WN_a) to which the almanac reference time (t_{oa}) is referenced (see paragraphs 20.3.3.5.1.2 and 20.3.3.5.2.2). The WN_a term consists of eight bits which shall be a modulo 256 binary representation of the GPS week number (see paragraph 6.2.4) to which the t_{oa} is referenced. Bits 9 through 16 of word three in page 25 of subframe 5 shall contain the value of t_{oa} which is referenced to this WN_a.

20.3.3.5.1.6 Coordinated Universal Time (UTC) Parameters. The 24 MSBs of words six through nine plus the eight MSBs of word ten in page 18 of subframe 4 shall contain the parameters related to correlating UTC time with GPS time. The bit length, scale factors, ranges, and units of these parameters are given in Table 20-IX. The related algorithms are described in paragraph 20.3.3.5.2.4.

The UTC parameters shall be updated by the CS at least once every six days while the CS is able to upload the SVs. If the CS is unable to upload the SVs, the accuracy of the UTC parameters transmitted by the SVs will degrade over time.

20.3.3.5.1.7 Ionospheric Data. The ionospheric parameters which allow the "L1 only" or "L2 only" user to utilize the ionospheric model (reference paragraph 20.3.3.5.2.5) for computation of the ionospheric delay are contained in page 18 of subframe 4. They occupy bits 9 through 24 of word three plus the 24 MSBs of words four and five. The bit lengths, scale factors, ranges, and units of these parameters are given in Table 20-X.

The ionospheric data shall be updated by the CS at least once every six days while the CS is able to upload the SVs. If the CS is unable to upload the SVs, the ionospheric data transmitted by the SVs may not be accurate.

Table 20-IX. UTC Parameters				
Parameter	No. of Bits**	Scale Factor (LSB)	Effective Range***	Units
A_0	32*	2^{-30}		seconds
A_1	24*	2^{-50}		sec/sec
Δt_{LS}	8*	1		seconds
t_{ot}	8	2^{12}	602,112	seconds
WN_t	8	1		weeks
WN_{LSF}	8	1		weeks
DN	8****	1	7	days
Δt_{LSF}	8*	1		seconds

* Parameters so indicated shall be two's complement with the sign bit (+ or -) occupying the MSB;

** See Figure 20-1 for complete bit allocation in subframe;

*** Unless otherwise indicated in this column, effective range is the maximum range attainable with indicated bit allocation and scale factor;

**** Right justified.

Table 20-X. Ionospheric Parameters				
Parameter	No. of Bits**	Scale Factor (LSB)	Effective Range***	Units
α_0	8*	2^{-30}		seconds
α_1	8*	2^{-27}		sec/semi-circle
α_2	8*	2^{-24}		sec/(semi-circle)^2
α_3	8*	2^{-24}		sec/(semi-circle)^3
β_0	8*	2^{11}		seconds
β_1	8*	2^{14}		sec/semi-circle
β_2	8*	2^{16}		sec/(semi-circle)^2
β_3	8*	2^{16}		sec/(semi-circle)^3

* Parameters so indicated shall be two's complement with the sign bit (+ or -) occupying the MSB;

** See Figure 20-1 for complete bit allocation in subframe;

*** Unless otherwise indicated in this column, effective range is the maximum range attainable with indicated bit allocation and scale factor.

20.3.3.5.1.8 Special Messages. Page 17 of subframe 4 shall be reserved for special messages with the specific contents at the discretion of the Operating Command. It shall accommodate the transmission of 22 eight-bit ASCII characters. The requisite 176 bits shall occupy bits 9 through 24 of word three, the 24 MSBs of words four through nine, plus the 16 MSBs of word ten. The eight MSBs of word three shall contain the data ID and SV ID, while bits 17 through 22 of word ten shall be reserved for system use. The remaining 50 bits of words three through ten are used for parity (six bits/word) and parity computation (two bits in word ten). The eight-bit ASCII characters shall be limited to the following set:

Alphanumeric Character	ASCII Character	Code (Octal)
A - Z	A - Z	101 - 132
0 - 9	0 - 9	060 - 071
+	+	053
-	-	055
. (Decimal point)	.	056
' (Minute mark)	'	047
° (Degree sign)	°	370
/	/	057
Blank	Space	040
:	:	072
" (Second mark)	"	042

20.3.3.5.1.9 NMCT. Page 13 of subframe 4 shall contain the NMCT data appropriate to the transmitting SV. Each NMCT contains a two-bit availability indicator (AI) followed by 30 slots which may contain up to 30 valid six-bit ERD values. The layout of these 31 data items is as shown in Figure 20-1.

The two-bit AI in bits 9 and 10 of word three of page 13 of subframe 4 provide the user with the following information.

AI	Navigation Message Correction Table Availability
00	The correction table is unencrypted and is available to both authorized and unauthorized users.
01	The correction table is encrypted and is available only to authorized users (normal mode).
10	No correction table available for either authorized or unauthorized users.
11	Reserved.

Each one of the 30 six-bit ERD slots in bits 11 through 24 of word three, bits 1 through 24 of words four through nine, and bits 1 through 22 of word ten of page 13 of subframe 4 will correspond to an ERD value for a particular SV ID. There are 31 possible SV IDs that these ERD slots may correspond to, ranging from SV ID 1 to SV ID 31. SV ID 32 is not a valid SV ID for any of the slots in an NMCT. The correspondence between the 30 ERD slots and the 31 possible SV IDs depends on the SV ID of the particular transmitting SV in accordance with the following two rules: 1) the CS shall ensure via upload that no SV shall transmit an NMCT containing an ERD value which applies to its own SV ID, and 2) the CS shall ensure via upload that all ERD values shall be transmitted in ascending numerical slot order of the corresponding SV ID. To illustrate: the SV operating as SV ID 1 will transmit (in order) ERD values which correspond to SV ID 2 through SV ID 31 in ERD slots 1 through 30 respectively, while the SV operating as SV ID 31 will transmit ERD values which correspond to SV ID 1 through SV ID 30 in ERD slots 1 through 30 respectively.

Each ERD value contained in an NMCT ERD slot shall be represented as a six-bit two's complement field with the sign bit occupying the MSB and an LSB of 0.3 meters for an effective range of ±9.3 m. A binary value of "100000" shall indicate that no valid ERD for the corresponding SV ID is present in that slot.

20.3.3.5.2 Algorithms Related to Subframe 4 and 5 Data. The following algorithms shall apply when interpreting Almanac, Coordinated Universal Time, Ionospheric Model, and NMCT data in the NAV message.

20.3.3.5.2.1 Almanac. The almanac is a subset of the clock and ephemeris data, with reduced precision. The user algorithm is essentially the same as the user algorithm used for computing the precise ephemeris from the one subframe 1, 2, and 3 parameters (see Table 20-IV). The almanac content for one SV is given in Table 20-VI. A close inspection of Table 20-VI will reveal that a nominal inclination angle of 0.30 semicircles is implicit and that the parameter δ_i (correction to inclination) is transmitted, as opposed to the value computed by the user. All other parameters appearing in the equations of Tables 20-IV, but not included in the content of the almanac, are set to zero for SV position determination. In these respects, the application of the Table 20-IV equations differs between the almanac and the ephemeris computations.

The user is cautioned that the sensitivity to small perturbations in the parameters is even greater for the almanac than for the ephemeris, with the sensitivity of the angular rate terms over the interval of applicability on the order of 10^{14} meters/(semicircle/second). An indication of the URE provided by a given almanac during each of the operational intervals is as follows:

Operational Interval	Almanac Ephemeris URE (estimated by analysis) 1 sigma (meters)
Normal	900*,†
Short-term Extended	900 - 3,600*
Long-term Extended	3600 - 300,000*

* URE values generally tend to degrade quadratically over time. Larger errors may be encountered during eclipse seasons and whenever a propulsive event has occurred.

† After the CS is unable to upload the SVs, URE values for the SVs operating in the Autonav mode tend to degrade quadratically such that the URE will approach 300,000 meters 1 sigma at 180 days.

20.3.3.5.2.2 Almanac Reference Time. Within each upload, the CS shall ensure that all t_{oa} values in subframes 4 and 5 shall be the same for a given almanac data set and shall differ for successive data sets which contain changes in almanac parameters or SV health. In addition, the Block IIR/IIR-M SVs will also ensure that, based on a valid CS upload, all t_{oa} values in subframes 4 and 5 will be the same for a given almanac data set and will differ for successive data sets which contain changes in almanac parameters.

Note that cutover to a new upload may continue to indicate the same t_{oa} values in subframes 4 and 5 as prior to the cutover but the new almanac data set may contain changes in almanac parameters or SV health. Note also that cutover to a new upload may occur between the almanac pages of interest and page 25 of subframe 5 (reference paragraph 20.3.4.1), and thus there may be a temporary inconsistency between t_{oa}, in the almanac page of interest, and in word 3 of page 25 of subframe 5. The t_{oa} mismatch signifies that this WN_a may not apply to the almanac of interest and that the user must not apply almanac data until the pages with identical values of t_{oa} are obtained.

Normal and Short-term Extended Operations. The almanac reference time, t_{oa}, is some multiple of 2^{12} seconds occurring approximately 70 hours after the first valid transmission time for this almanac data set (reference 20.3.4.5). The almanac is updated often enough to ensure that GPS time, t, shall differ from t_{oa} by less than 3.5 days during the transmission period. The time from epoch t_k shall be computed as described in Table 20-IV, except that t_{oe} shall be replaced with t_{oa}.

Long-term Extended Operations. During long-term extended operations or if the user wishes to extend the use time of the almanac beyond the time span that it is being transmitted, one must account for crossovers into time spans where these computations of t_k are not valid. This may be accomplished without time ambiguity by recognizing that the almanac reference time (t_{oa}) is referenced to the almanac reference week (WN_a), both of which are given in word three of page 25 of subframe 5 (see paragraph 20.3.3.5.1.5).

20.3.3.5.2.3 Almanac Time Parameters. The almanac time parameters shall consist of an 11-bit constant term (a_{f0}) and an 11-bit first order term (a_{f1}). The applicable first order polynomial, which shall provide time to within 2 microseconds of GPS time (t) during the interval of applicability, is given by

$$t = t_{sv} - \Delta t_{sv}$$

where

t = GPS system time (seconds),

t_{sv} = effective SV PRN code phase time at message transmission time (seconds),

Δt_{sv} = SV PRN code phase time offset (seconds).

The SV PRN code phase offset is given by

$$\Delta t_{sv} = a_{f0} + a_{f1}\, t_k$$

where the computation of t_k is described in paragraph 20.3.3.5.2.2, and the polynomial coefficients a_{f0} and a_{f1} are given in the almanac. Since the periodic relativistic effect is less than 25 meters, it need not be included in the time scale used for almanac evaluation. Over the span of applicability, it is expected that the almanac time parameters will provide a statistical URE component of less than 135 meters, one sigma. This is partially due to the fact that the error caused by the truncation of a_{f0} and a_{f1} may be as large as 150 meters plus 50 meters/day relative to the t_{oa} reference time.

During extended operations (short-term and long-term) the almanac time parameter may not provide the specified time accuracy or URE component.

20.3.3.5.2.4 Coordinated Universal Time (UTC). Page 18 of subframe 4 includes: (1) the parameters needed to relate GPS time to UTC, and (2) notice to the user regarding the scheduled future or recent past (relative to NAV message upload) value of the delta time due to leap seconds (Δt_{LSF}), together with the week number (WN_{LSF}) and the day number (DN) at the end of which the leap second becomes effective. "Day one" is the first day relative to the end/start of week and the WN_{LSF} value consists of eight bits which shall be a modulo 256 binary representation of the GPS week number (see paragraph 6.2.4) to which the DN is referenced. The user must account for the truncated nature of this parameter as well as truncation of WN, WN_t, and WN_{LSF} due to rollover of full week number (see paragraph 3.3.4(b)). The CS shall manage these parameters such that, when Δt_{LS} and Δt_{LSF} differ, the absolute value of the difference between the untruncated WN and WN_{LSF} values shall not exceed 127.

Depending upon the relationship of the effectivity date to the user's current GPS time, the following three different UTC/GPS-time relationships exist:

a. Whenever the effectivity time indicated by the WN_{LSF} and the DN values is not in the past (relative to the user's present time), <u>and</u> the user's present time does not fall in the time span which starts at six hours prior to the effectivity time and ends at six hours after the effectivity time, the UTC/GPS-time relationship is given by

$$t_{UTC} = (t_E - \Delta t_{UTC}) \text{ [modulo 86400 seconds]}$$

where t_{UTC} is in seconds and

Δt_{UTC}	=	$\Delta t_{LS} + A_0 + A_1 (t_E - t_{ot} + 604800 (WN - WN_t))$, seconds;
t_E	=	GPS time as estimated by the user after correcting t_{SV} for factors described in paragraph 20.3.3.3.3 as well as for selective availability (SA) (dither) effects;
Δt_{LS}	=	delta time due to leap seconds;
A_0 and A_1	=	constant and first order terms of polynomial;
t_{ot}	=	reference time for UTC data (reference 20.3.4.5);
WN	=	current week number (derived from subframe 1);
WN_t	=	UTC reference week number.

The estimated GPS time (t_E) shall be in seconds relative to end/start of week. During the normal and short-term extended operations, the reference time for UTC data, t_{ot}, is some multiple of 2^{12} seconds occurring approximately 70 hours after the first valid transmission time for this UTC data set (reference 20.3.4.5). The reference time for UTC data (t_{ot}) shall be referenced to the start of that week whose number (WN_t) is given in word eight of page 18 in subframe 4. The WN_t value consists of eight bits which shall be a modulo 256 binary representation of the GPS week number (see paragraph 6.2.4) to which the t_{ot} is referenced. The user must account for the truncated nature of this parameter as well as truncation of WN, WN_t, and WN_{LSF} due to rollover of full week number (see paragraph 3.3.4(b)). The CS shall manage these parameters such that the absolute value of the difference between the untruncated WN and WN_t values shall not exceed 127.

b. Whenever the user's current time falls within the time span of six hours prior to the effectivity time to six hours after the effectivity time, proper accommodation of the leap second event with a possible week number transition is provided by the following expression for UTC:

$$t_{UTC} = W[\text{modulo } (86400 + \Delta t_{LSF} - \Delta t_{LS})], \text{ seconds;}$$

where

$$W = (t_E - \Delta t_{UTC} - 43200)[\text{modulo } 86400] + 43200, \text{ seconds;}$$

and the definition of Δt_{UTC} (as given in 20.3.3.5.2.4a above) applies throughout the transition period. Note that when a leap second is added, unconventional time values of the form 23:59:60.xxx are encountered. Some user equipment may be designed to approximate UTC by decrementing the running count of time within several seconds after the event, thereby promptly returning to a proper time indication. Whenever a leap second event is encountered, the user equipment must consistently implement carries or borrows into any year/week/day counts.

c. Whenever the effectivity time of the leap second event, as indicated by the WN_{LSF} and DN values, is in the "past" (relative to the user's current time), <u>and</u> the user's current time does not fall in the time span as given above in 20.3.3.5.2.4b, the relationship previously given for t_{UTC} in 20.3.3.5.2.4a above is valid except that the value of Δt_{LSF} is substituted for Δt_{LS}. The CS will coordinate the update of UTC parameters at a future upload so as to maintain a proper continuity of the t_{UTC} time scale.

20.3.3.5.2.5 Ionospheric Model. The "two frequency" (L1 and L2) user shall correct the time received from the SV for ionospheric effect by utilizing the time delay differential between L1 and L2 (reference paragraph 20.3.3.3.3.3). The "one frequency" user, however, may use the model given in Figure 20-4 to make this correction. It is estimated that the use of this model will provide at least a 50 percent reduction in the single - frequency user's RMS error due to ionospheric propagation effects. During extended operations, or for the SVs in the Autonav mode if the CS is unable to upload the SVs, the use of this model will yield unpredictable results.

20.3.3.5.2.6 NMCT Data. For each SV, the ERD value in the NMCT is an estimated pseudorange error. Each ERD value is computed by the CS and represents the radial component of the satellite ephemeris error minus the speed of light times the satellite clock error. The satellite ephemeris and clock errors are computed by subtracting the broadcast from current estimates. Therefore, the ERD value may be used as follows to correct the user's measured pseudorange:

$$PR_c = PR - ERD$$

where,

PR_c = pseudorange corrected with the ERD value from the NMCT

PR = measured pseudorange

Note that as described above, the ERD values are actually error estimates rather than differential corrections and so are subtracted rather than added in the above equation.

The ionospheric correction model is given by

$$T_{iono} = \begin{cases} F * \left[5.0 * 10^{-9} + (AMP)\left(1 - \frac{x^2}{2} + \frac{x^4}{24}\right)\right], & |x| < 1.57 \\ F * \left(5.0 * 10^{-9}\right), & |x| \geq 1.57 \end{cases} \quad \text{(sec)}$$

where

T_{iono} is referred to the L1 frequency; if the user is operating on the L2 frequency, the correction term must be multiplied by γ (reference paragraph 20.3.3.3.3.2),

$$AMP = \begin{cases} \sum_{n=0}^{3} \alpha_n \phi_m^n, & AMP \geq 0 \\ \text{if } AMP < 0, & AMP = 0 \end{cases} \quad \text{(sec)}$$

$$x = \frac{2\pi\ (t - 50400)}{PER} \qquad \text{(radians)}$$

$$PER = \begin{cases} \sum_{n=0}^{3} \beta_n \phi_m^n, & PER \geq 72{,}000 \\ \text{if } PER < 72{,}000, & PER = 72{,}000 \end{cases} \quad \text{(sec)}$$

$$F = 1.0 + 16.0\ [0.53 - E]^3$$

and α_n and β_n are the satellite transmitted data words with n = 0, 1, 2, and 3.

Figure 20-4. Ionospheric Model (Sheet 1 of 3)

Other equations that must be solved are

$$\phi_m = \phi_i + 0.064\cos(\lambda_i - 1.617) \qquad \text{(semi-circles)}$$

$$\lambda_i = \lambda_u + \frac{\psi \sin A}{\cos \phi_i} \qquad \text{(semi-circles)}$$

$$\phi_i = \begin{cases} \phi_u + \psi \cos A, & |\phi_i| \le 0.416 \\ \text{if } \phi_i > +0.416, \text{ then } \phi_i = +0.416 \\ \text{if } \phi_i < -0.416, \text{ then } \phi_i = -0.416 \end{cases} \qquad \text{(semi-circles)}$$

$$\psi = \frac{0.0137}{E + 0.11} - 0.022 \qquad \text{(semi-circles)}$$

$$t = 4.32\ (10^4)\ \lambda_i + \text{GPS time} \qquad \text{(sec)}$$

where

$0 \le t < 86400$: therefore, if $t \ge 86400$ seconds, subtract 86400 seconds;

if $t < 0$ seconds, add 86400 seconds.

Figure 20-4. Ionospheric Model (Sheet 2 of 3)

The terms used in computation of ionospheric delay are as follows:

- Satellite Transmitted Terms

α_n	-	the coefficients of a cubic equation representing the amplitude of the vertical delay (4 coefficients - 8 bits each)
β_n	-	the coefficients of a cubic equation representing the period of the model (4 coefficients - 8 bits each)

- Receiver Generated Terms

E	-	elevation angle between the user and satellite (semi-circles)
A	-	azimuth angle between the user and satellite, measured clockwise positive from the true North (semi-circles)
ϕ_u	-	user geodetic latitude (semi-circles) WGS-84
λ_u	-	user geodetic longitude (semi-circles) WGS-84
GPS time	-	receiver computed system time

- Computed Terms

X	-	phase (radians)
F	-	obliquity factor (dimensionless)
t	-	local time (sec)
ϕ_m	-	geomagnetic latitude of the earth projection of the ionospheric intersection point (mean ionospheric height assumed 350 km) (semi-circles)
λ_i	-	geodetic longitude of the earth projection of the ionospheric intersection point (semi-circles)
ϕ_i	-	geodetic latitude of the earth projection of the ionospheric intersection point (semi-circles)
ψ	-	earth's central angle between the user position and the earth projection of ionospheric intersection point (semi-circles)

Figure 20-4. Ionospheric Model (Sheet 3 of 3)

20.3.4 Timing Relationships. The following conventions shall apply.

20.3.4.1 Paging and Cutovers. At end/start of week (a) the cyclic paging of subframes 1 through 5 shall restart with subframe 1 regardless of which subframe was last transmitted prior to end/start of week, and (b) the cycling of the 25 pages of subframes 4 and 5 shall restart with page 1 of each of the subframes, regardless of which page was the last to be transmitted prior to the end/start of week. Cutovers to newly updated data for subframes 1, 2, and 3 occur on frame boundaries (i.e., modulo 30 seconds relative to end/start of week). Newly updated data for subframes 4 and 5 may start to be transmitted with any of the 25 pages of these subframes.

20.3.4.2 SV Time vs. GPS Time. In controlling the SVs and uploading of data, the CS shall allow for the following timing relationships:

a. Each SV operates on its own SV time;
b. All time-related data in the TLM word and the HOW shall be in SV-time;
c. All other data in the NAV message shall be relative to GPS time;
d. The acts of transmitting the NAV message shall be executed by the SV on SV time.

20.3.4.3 Speed of Light. The speed of light used by the CS for generating the data described in the above paragraphs is

$$c = 2.99792458 \times 10^8 \text{ meters per second}$$

which is the official WGS-84 speed of light. The user shall use the same value for the speed of light in all computations.

20.3.4.4 Data Sets. The IODE is an 8 bit number equal to the 8 LSBs of the 10 bit IODC of the same data set. The following rules govern the transmission of IODC and IODE values in different data sets: (1) The transmitted IODC will be different from any value transmitted by the SV during the preceding seven days; (2) The transmitted IODE will be different from any value transmitted by the SV during the preceding six hours. The range of IODC will be as given in Table 20-XI for Block II/IIA SVs and Table 20-XII for Block IIR/IIR-M/IIF SVs.

Cutovers to new data sets will occur only on hour boundaries except for the first data set of a new upload. The first data set may be cut-in (reference paragraph 20.3.4.1) at any time during the hour and therefore may be transmitted by the SV for less than one hour. During short-term operations, cutover to 4-hour sets and subsequent cutovers to succeeding 4-hour data sets will always occur modulo 4 hours relative to end/start of week. Cutover from 4-hour data sets to 6-hour data sets shall occur modulo 12 hours relative to end/start of week. Cutover from 12-hour data sets to 24-hour data sets shall occur modulo 24 hours relative to end/start of week. Cutover from a data set transmitted 24 hours or more occurs on a modulo 24-hour boundary relative to end/start of week.

The start of the transmission interval for each data set corresponds to the beginning of the curve fit interval for the data set. Each data set remains valid for the duration of its curve fit interval.

Normal Operations. The subframe 1, 2, and 3 data sets are transmitted by the SV for periods of two hours. The corresponding curve fit interval is four hours. SVs operating in the Autonav mode will deviate. They will transmit subframe 1, 2, and 3 data sets for periods of one hour. The corresponding curve-fit interval will be four hours.

Short-term and Long-term Extended Operations. The transmission intervals and curve fit intervals with the applicable IODC ranges are given in Tables 20-XI and 20-XII.

Table 20-XI. IODC Values and Data Set Lengths (Block II/IIA)			
Days Spanned	Transmission Interval (hours) (Note 4)	Curve Fit Interval (hours)	IODC Range (Note 1)
1	2	4	(Note 2)
2-14	4	6	(Note 2)
15-16	6	8	240-247
17-20	12	14	248-255, 496 (Note 3)
21-27	24	26	497-503
28-41	48	50	504-510
42-59	72	74	511, 752-756
60-63	96	98	757

Note 1: For transmission intervals of 6 hours or greater, the IODC values shown will be transmitted in increasing order.

Note 2: IODC values for blocks with 2- or 4-hour transmission intervals (at least the first 14 days after upload) shall be any numbers in the range 0 to 1023 excluding those values of IODC that correspond to IODE values in the range 240-255, subject to the constraints on re-transmission given in paragraph 20.3.4.4.

Note 3: The ninth 12-hour data set may not be transmitted.

Note 4: The first data set of a new upload may be cut-in at any time and therefore the transmission interval may be less than the specified value.

Table 20-XII. IODC Values and Data Set Lengths (Block IIR/IIR-M/IIF)			
Days Spanned	Transmission Interval (hours) (Note 5)	Curve Fit Interval (hours)	IODC Range
1	2 (Note 4)	4	(Note 2)
2-14	4	6	(Note 2)
15-16	6	8	240-247 (Note 1)
17-20	12	14	248-255, 496 (Note 1) (Note 3)
21-62	24	26	497-503, 1021-1023

Note 1: For transmission intervals of 6 and 12 hours, the IODC values shown will be transmitted in increasing order.

Note 2: IODC values for blocks with 1-, 2- or 4-hour transmission intervals (at least the first 14 days after upload) shall be any numbers in the range 0 to 1023 excluding those values of IODC that correspond to IODE values in the range 240-255, subject to the constraints on re-transmission given in paragraph 20.3.4.4.

Note 3: The ninth 12-hour data set may not be transmitted.

Note 4: SVs operating in the Autonav mode will have transmission intervals of 1 hour per paragraph 20.3.4.4.

Note 5: The first data set of a new upload may be cut-in at any time and therefore the transmission interval may be less than the specified value.

20.3.4.5 Reference Times. Many of the parameters which describe the SV state vary with true time, and must therefore be expressed as time functions with coefficients provided by the Navigation Message to be evaluated by the user equipment. These include the following parameters as functions of GPS time:

a. SV time,
b. Mean anomaly,
c. Longitude of ascending node,
d. UTC,
e. Inclination.

Each of these parameters is formulated as a polynomial in time. The specific time scale of expansion can be arbitrary. Due to the short data field lengths available in the Navigation Message format, the nominal epoch of the polynomial is chosen near the midpoint of the expansion range so that quantization error is small. This results in time epoch values which can be different for each data set. Time epochs contained in the Navigation Message and the different algorithms which utilize them are related as follows:

Epoch	Application Algorithm Reference
t_{oc}	20.3.3.3.3.1
t_{oe}	20.3.3.4.3
t_{oa}	20.3.3.5.2.2 and 20.3.3.5.2.3
t_{ot}	20.3.3.5.2.4

Table 20-XIII describes the nominal selection which will be expressed modulo 604,800 seconds in the Navigation Message.

The coefficients of expansion are obviously dependent upon choice of epoch, and thus the epoch time and expansion coefficients must be treated as an inseparable parameter set. Note that a user applying current navigation data will normally be working with negative values of $(t-t_{oc})$ and $(t-t_{oe})$ in evaluating the expansions.

The CS shall assure that the t_{oe} value, for at least the first data set transmitted by an SV after a new upload, is different from that transmitted prior to the cutover (see paragraph 20.3.4.4). As such, when a new upload is cutover for transmission, the CS shall introduce a small deviation in the t_{oe} resulting in the t_{oe} value that is offset from the hour boundaries (see Table 20-XIII). This offset t_{oe} will be transmitted by an SV in the first data set after a new upload cutover and the second data set, following the first data set, may also continue to reflect the same offset in the t_{oe}.

When the t_{oe}, immediately prior to a new upload cutover, already reflects a small deviation (i.e. a new upload cutover has occurred in the recent past), then the CS shall introduce an additional deviation to the t_{oe} when a new upload is cutover for transmission.

A change from the broadcast reference time immediately prior to cutover is used to indicate a change of values in the data set. The user may use the following example algorithm to detect the occurrence of a new upload cutover:

$DEV = t_{oe}$ [modulo 3600]

If $DEV \neq 0$, then a new upload cutover has occurred within past 4 hours.

Table 20-XIII. Reference Times					
Fit Interval (hours)	Transmission Interval (hours)	Hours After First Valid Transmission Time			
		t_{oc} (clock)	t_{oe} (ephemeris)	t_{oa} (almanac)	t_{ot} (UTC)
4	2*	2	2		
6	4	3	3		
8	6	4	4		
14	12	7	7		
26	24	13	13		
50	48	25	25		
74	72	37	37		
98	96	49	49		
122	120	61	61		
146	144	73	73		
144 (6 days)	144			70	70
$\geq$ 144 (6 days)	> 144			70	70
* Some SVs will have transmission intervals of 1 hour per paragraph 20.3.4.4.					

20.3.5 Data Frame Parity. The data signal shall contain parity coding according to the following conventions.

20.3.5.1 SV/CS Parity Algorithm. This algorithm links 30-bit words within and across subframes of ten words using the (32,26) Hamming Code described in Table 20-XIV.

20.3.5.2 User Parity Algorithm. As far as the user is concerned, several options are available for performing data decoding and error detection. Figure 20-5 presents an example flow chart that defines one way of recovering data (d_n) and checking parity. The parity bit D_{30}^* is used for recovering raw data. The parity bits D_{29}^* and D_{30}^*, along with the recovered raw data (d_n) are modulo-2 added in accordance with the equations appearing in Table 20-XIV for D_{25} . . . D_{30}, which provide parity to compare with transmitted parity D_{25} . . . D_{30}.

Table 20-XIV. Parity Encoding Equations		
D_1	=	$d_1 \oplus D_{30}^{\star}$
D_2	=	$d_2 \oplus D_{30}^{\star}$
D_3	=	$d_3 \oplus D_{30}^{\star}$
•		•
•		•
•		•
•		•
D_{24}	=	$d_{24} \oplus D_{30}^{\star}$
D_{25}	=	$D_{29}^{\star} \oplus d_1 \oplus d_2 \oplus d_3 \oplus d_5 \oplus d_6 \oplus d_{10} \oplus d_{11} \oplus d_{12} \oplus d_{13} \oplus d_{14} \oplus d_{17} \oplus d_{18} \oplus d_{20} \oplus d_{23}$
D_{26}	=	$D_{30}^{\star} \oplus d_2 \oplus d_3 \oplus d_4 \oplus d_6 \oplus d_7 \oplus d_{11} \oplus d_{12} \oplus d_{13} \oplus d_{14} \oplus d_{15} \oplus d_{18} \oplus d_{19} \oplus d_{21} \oplus d_{24}$
D_{27}	=	$D_{29}^{\star} \oplus d_1 \oplus d_3 \oplus d_4 \oplus d_5 \oplus d_7 \oplus d_8 \oplus d_{12} \oplus d_{13} \oplus d_{14} \oplus d_{15} \oplus d_{16} \oplus d_{19} \oplus d_{20} \oplus d_{22}$
D_{28}	=	$D_{30}^{\star} \oplus d_2 \oplus d_4 \oplus d_5 \oplus d_6 \oplus d_8 \oplus d_9 \oplus d_{13} \oplus d_{14} \oplus d_{15} \oplus d_{16} \oplus d_{17} \oplus d_{20} \oplus d_{21} \oplus d_{23}$
D_{29}	=	$D_{30}^{\star} \oplus d_1 \oplus d_3 \oplus d_5 \oplus d_6 \oplus d_7 \oplus d_9 \oplus d_{10} \oplus d_{14} \oplus d_{15} \oplus d_{16} \oplus d_{17} \oplus d_{18} \oplus d_{21} \oplus d_{22} \oplus d_{24}$
D_{30}	=	$D_{29}^{\star} \oplus d_3 \oplus d_5 \oplus d_6 \oplus d_8 \oplus d_9 \oplus d_{10} \oplus d_{11} \oplus d_{13} \oplus d_{15} \oplus d_{19} \oplus d_{22} \oplus d_{23} \oplus d_{24}$

Where

$d_1, d_2, ..., d_{24}$ are the source data bits;

the symbol ★ is used to identify the last 2 bits of the previous word of the subframe;

$D_{25}, D_{26}, ..., D_{30}$ are the computed parity bits;

$D_1, D_2, ..., D_{29}, D_{30}$ are the bits transmitted by the SV;

$\oplus$ is the "modulo-2" or "exclusive-or" operation.

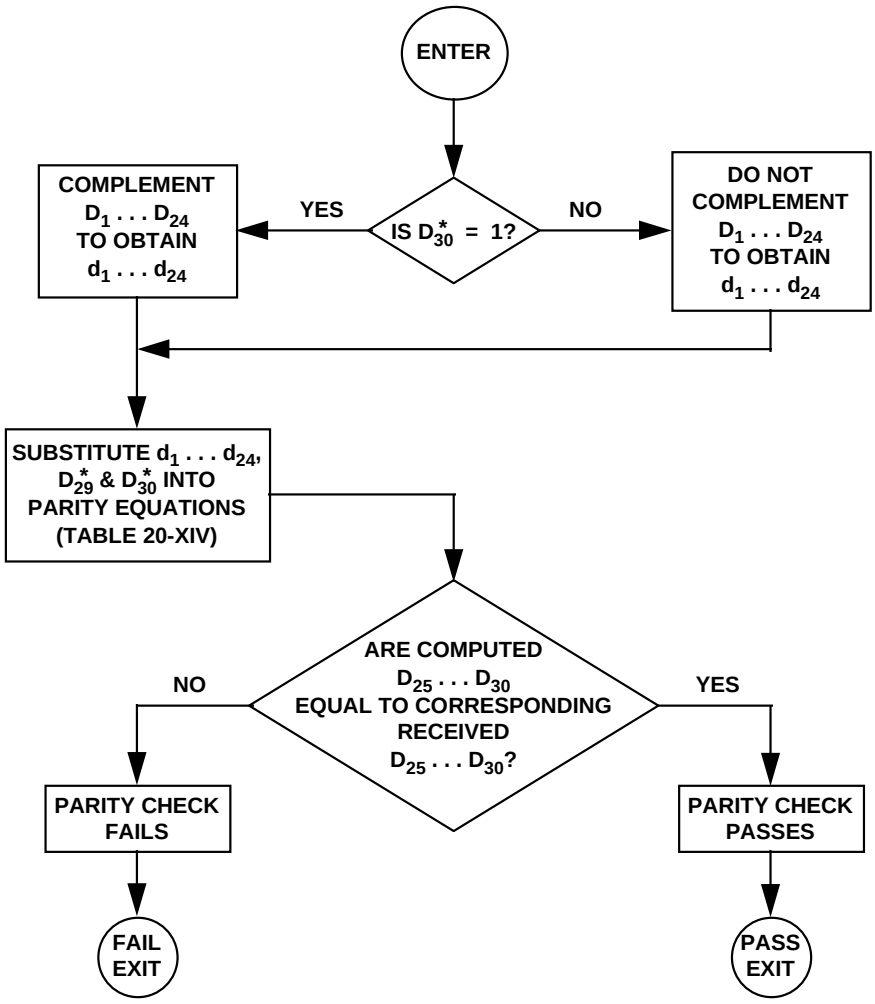

Figure 20-5. Example Flow Chart for User Implementation of Parity Algorithm

(This page intentionally left blank.)

30. APPENDIX III. GPS NAVIGATION DATA STRUCTURE FOR CNAV DATA, $D_C(t)$

30.1 Scope. This appendix describes the specific GPS CNAV data structure denoted as $D_C(t)$.

30.2 Applicable Documents.

30.2.1 Government Documents. In addition to the documents listed in paragraph 2.1, the following documents of the issue specified contribute to the definition of the CNAV data related interfaces and form a part of this Appendix to the extent specified herein.

Specifications

None

Standards

None

Other Publications

None

30.2.2 Non-Government Documents. In addition to the documents listed in paragraph 2.2, the following documents of the issue specified contribute to the definition of the CNAV data related interfaces and form a part of this Appendix to the extent specified herein.

Specifications

None

Other Publications

None

(This page intentionally left blank.)

30.3 Requirements.

30.3.1 Data Characteristics. The CNAV data, $D_C(t)$, is a higher precision representation and nominally contains more accurate data than the NAV data, D(t), described in Appendix II. Also, the CNAV data stream uses a different parity algorithm.

Users are advised that the CNAV data, $D_C(t)$, described in this appendix and the NAV data, D(t), described in Appendix II, should not be mixed in any user algorithms or applications. Each of the two data sets should be treated as a set and used accordingly.

30.3.2 Message Structure. As shown in Figures 30-1 through 30-14, the CNAV message structure utilizes a basic format of twelve-second 300-bit long messages. Each message contains a Cyclic Redundancy Check (CRC) parity block consisting of 24 bits covering the entire twelve-second message (300 bits) (reference Section 30.3.5). Message type 0 (zero) is defined to be the default message. In the event of message generation failure, the SV shall replace each affected message type with the default message type. In the event that a particular message is not assigned (by the CS) a particular message type for broadcast, the SV shall generate and broadcast the default message type in that message slot.

Currently undefined and unused message types are reserved for future use.

30.3.3 Message Content. Each message starts with an 8-bit preamble – 10001011, followed by a 6-bit PRN number of the transmitting SV, a 6-bit message type ID with a range of 0 (000000) to 63 (111111), and the 17-bit message time of week (TOW) count. When the value of the message TOW count is multiplied by 6, it represents SV time in seconds at the start of the next 12-second message. An “alert” flag, when raised (bit 38 = “1”), indicates to the user that the SV URA and/or the SV User Differential Range Accuracy (UDRA) may be worse than indicated in the respective message types, and the SV should be used at the user’s own risk. For each default message (Message Type 0), bits 39 through 276 shall be alternating ones and zeros and the message shall contain a proper CRC parity block.

(This page intentionally left blank.)

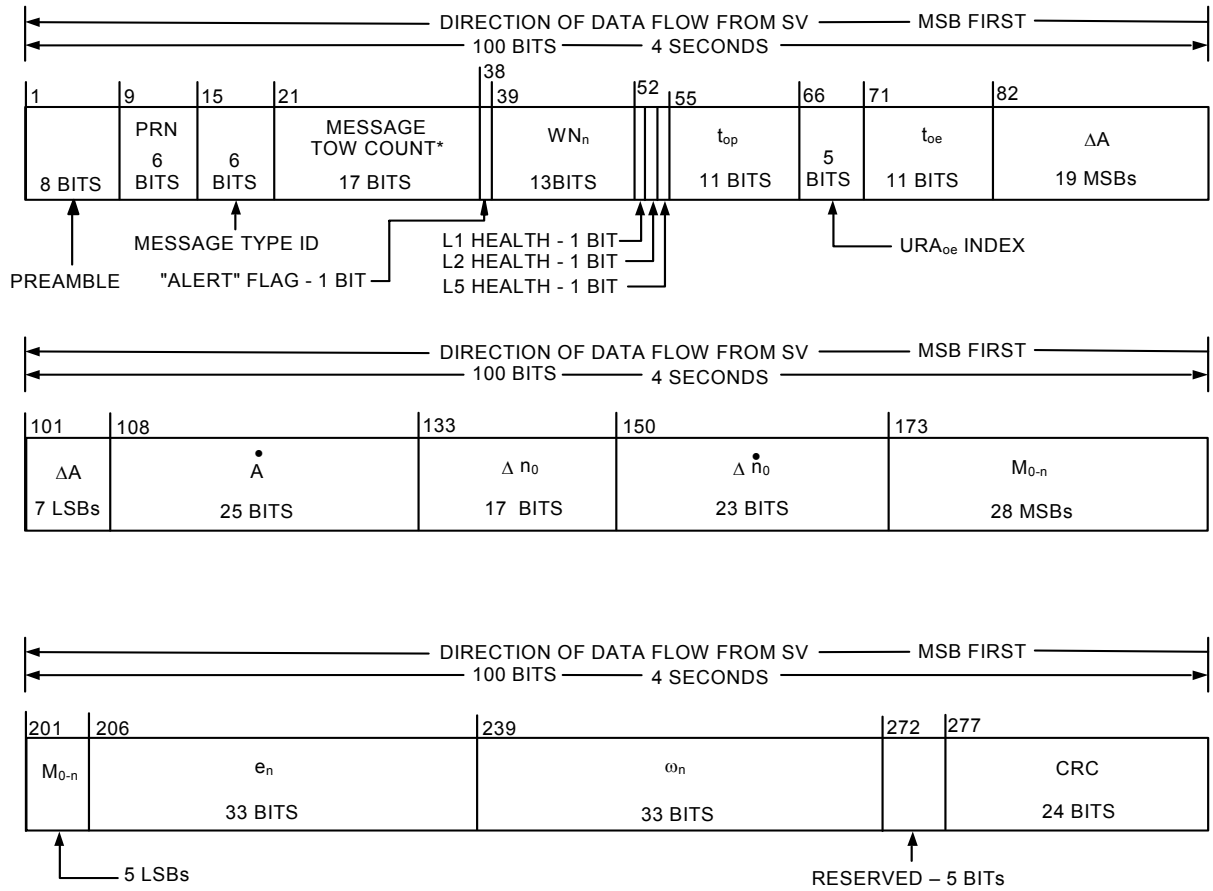

* MESSAGE TOW COUNT = 17 MSB OF ACTUAL TOW COUNT AT START OF NEXT 12-SECOND MESSAGE

Figure 30-1. Message Type 10 - Ephemeris 1

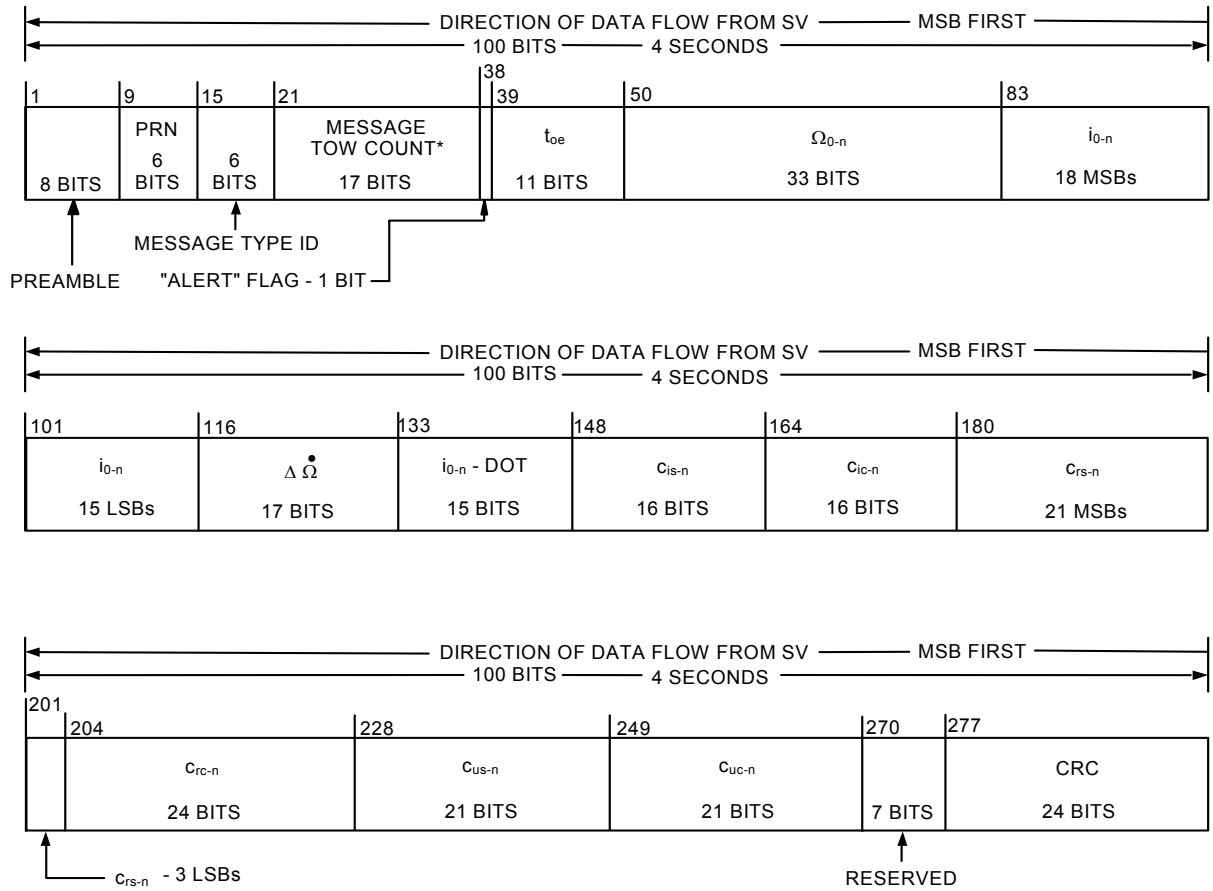

* MESSAGE TOW COUNT = 17 MSB OF ACTUAL TOW COUNT AT START OF NEXT 12-SECOND MESSAGE

Figure 30-2. Message Type 11 - Ephemeris 2

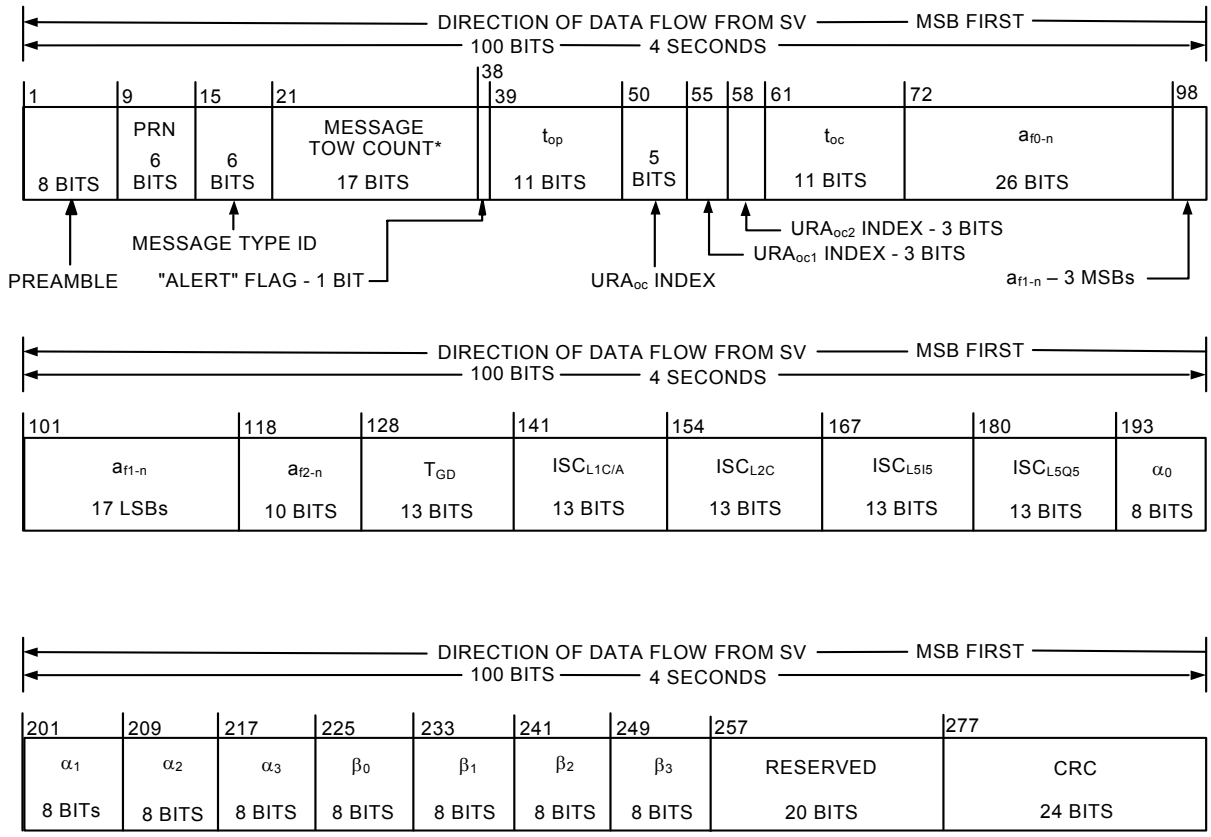

* MESSAGE TOW COUNT = 17 MSB OF ACTUAL TOW COUNT AT START OF NEXT 12-SECOND MESSAGE

Figure 30-3. Message Type 30 - Clock, IONO & Group Delay

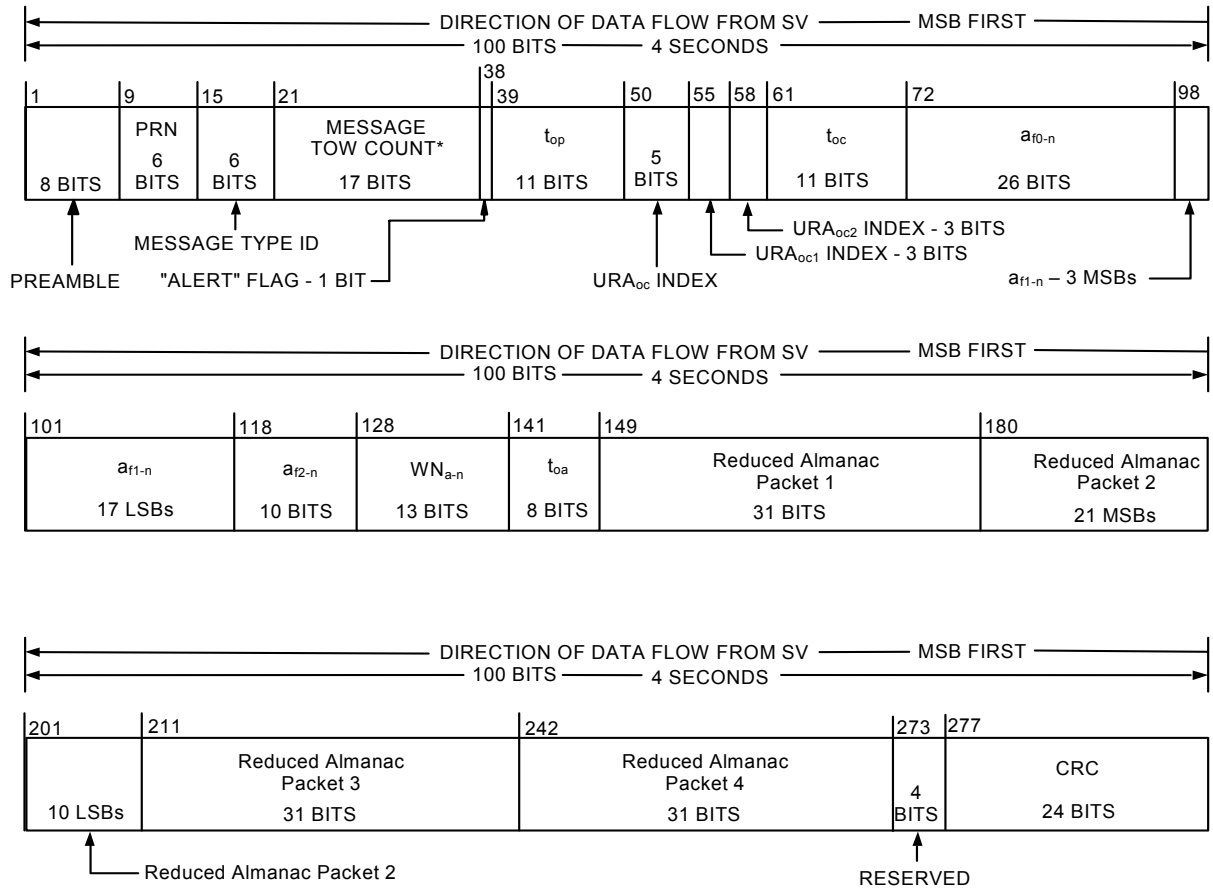

* MESSAGE TOW COUNT = 17 MSB OF ACTUAL TOW COUNT AT START OF NEXT 12-SECOND MESSAGE

Figure 30-4. Message Type 31 - Clock & Reduced Almanac

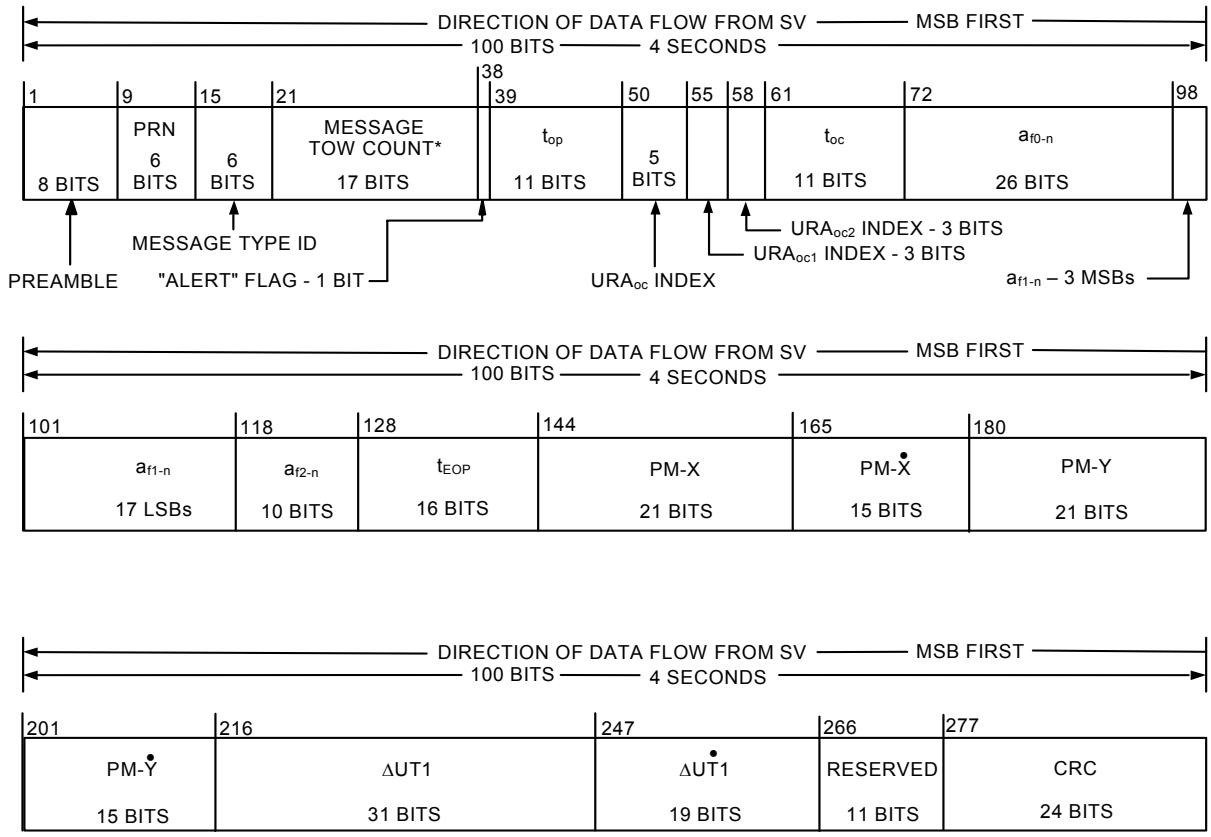

* MESSAGE TOW COUNT = 17 MSB OF ACTUAL TOW COUNT AT START OF NEXT 12-SECOND MESSAGE

Figure 30-5. Message Type 32 - Clock & EOP

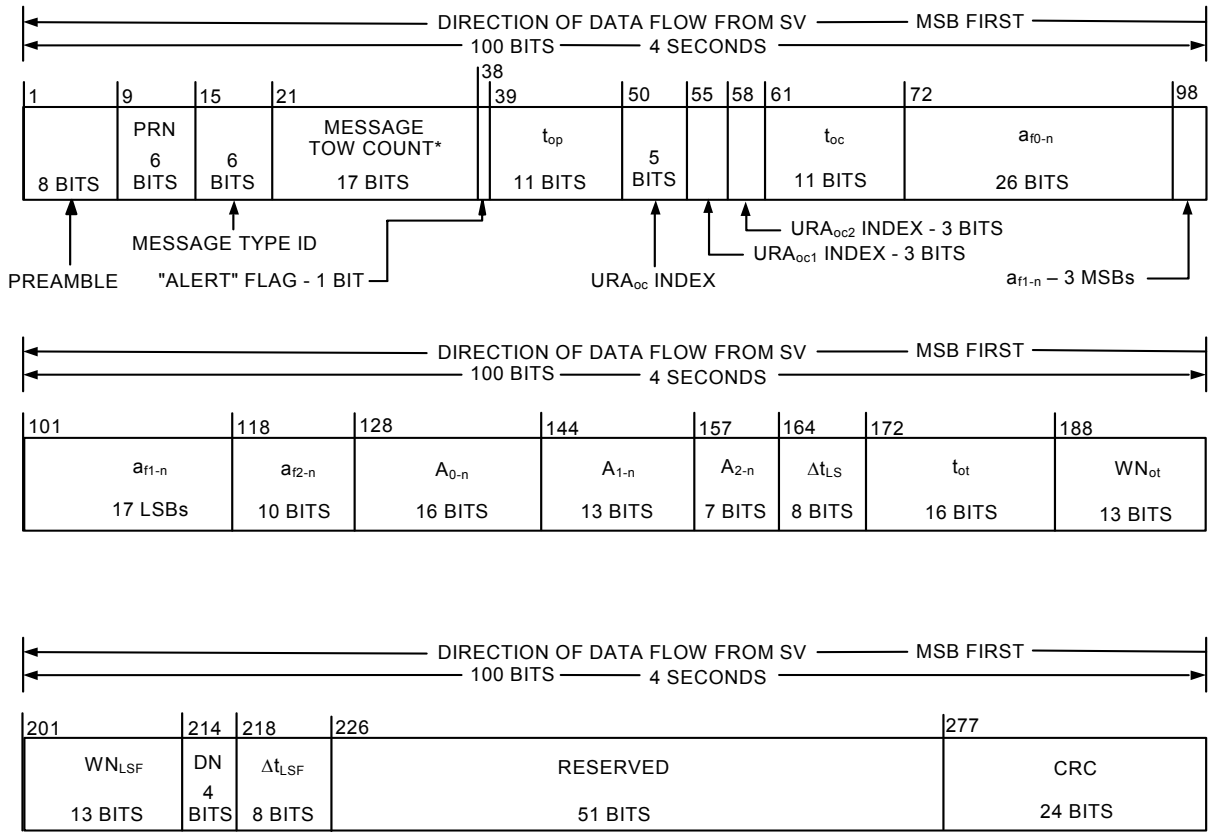

* MESSAGE TOW COUNT = 17 MSB OF ACTUAL TOW COUNT AT START OF NEXT 12-SECOND MESSAGE

Figure 30-6. Message Type 33 - Clock & UTC

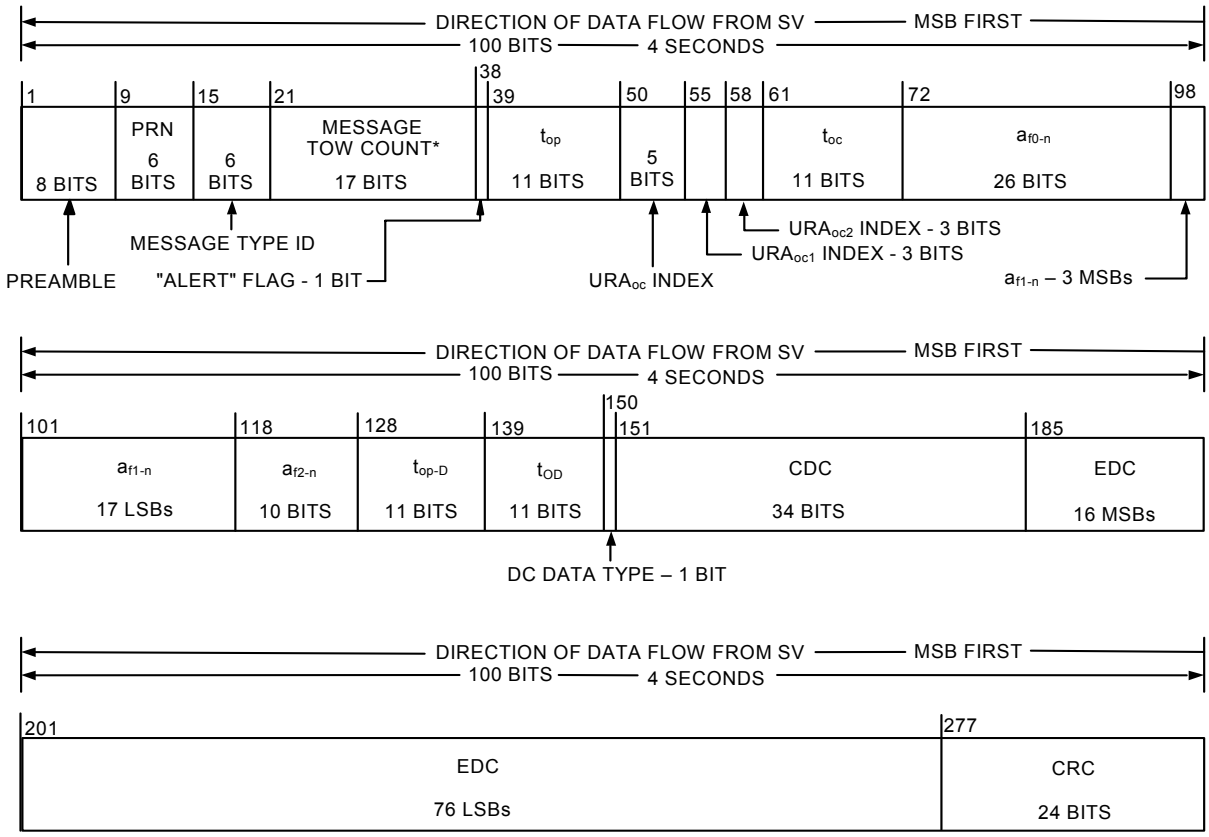

* MESSAGE TOW COUNT = 17 MSB OF ACTUAL TOW COUNT AT START OF NEXT 12-SECOND MESSAGE

CDC = Clock Differential Correction
EDC = Ephemeris Differential Correction

Figure 30-7. Message Type 34 - Clock & Differential Correction

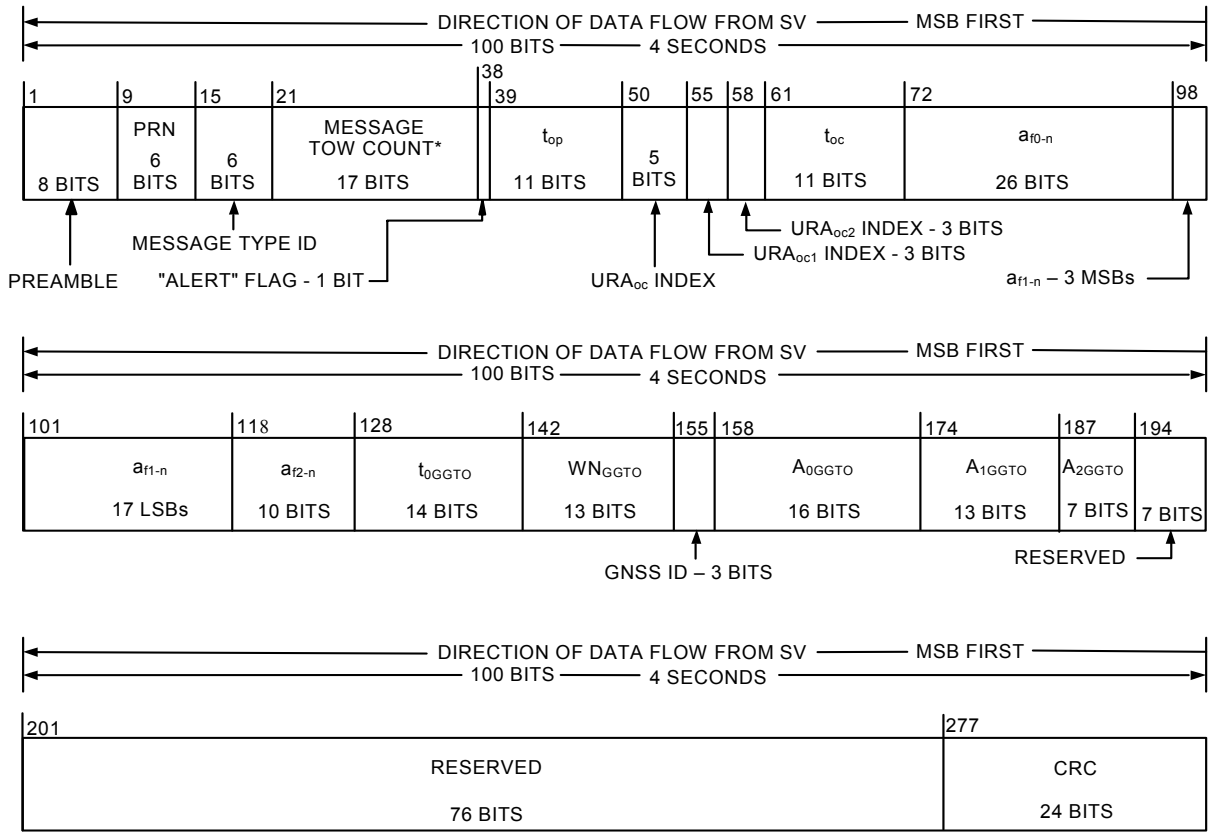

* MESSAGE TOW COUNT = 17 MSB OF ACTUAL TOW COUNT AT START OF NEXT 12-SECOND MESSAGE

Figure 30-8. Message Type 35 - Clock & GGTO

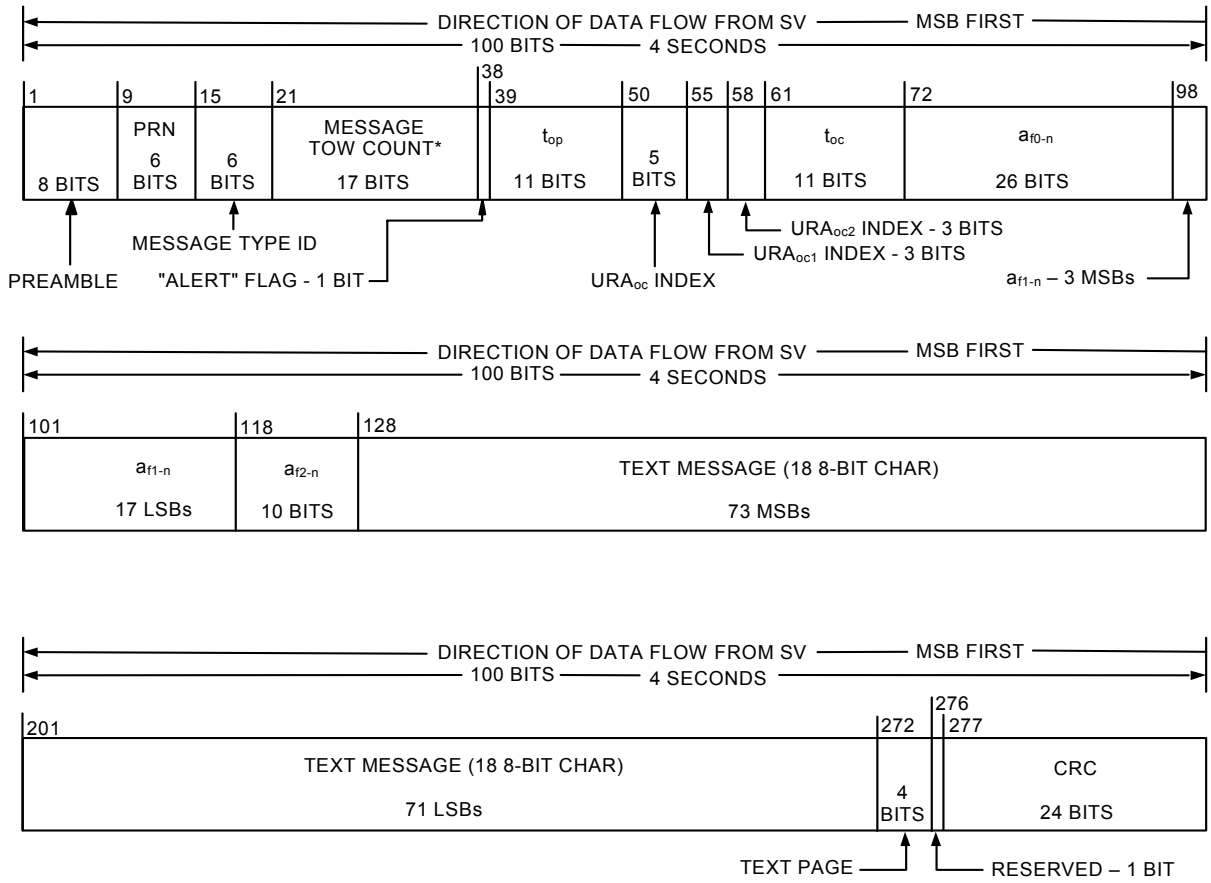

* MESSAGE TOW COUNT = 17 MSB OF ACTUAL TOW COUNT AT START OF NEXT 12-SECOND MESSAGE

Figure 30-9. Message Type 36 - Clock & Text

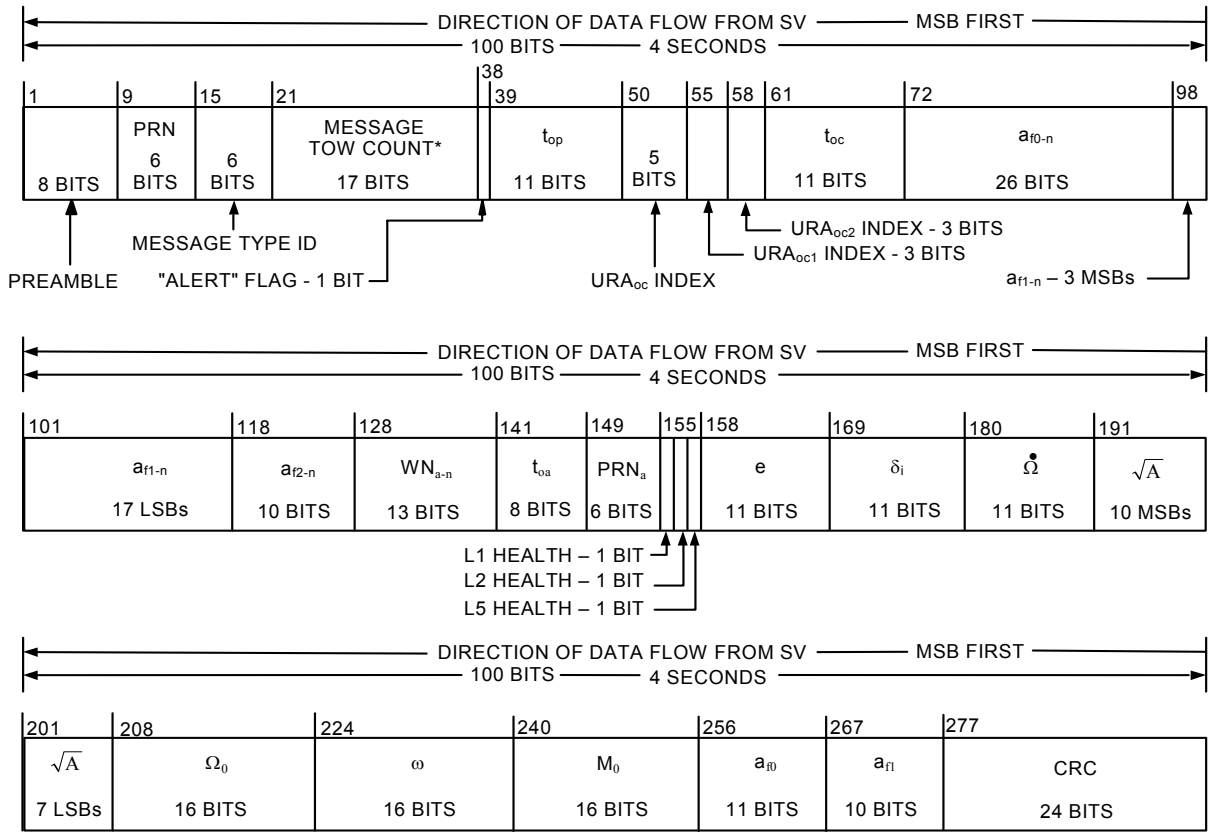

* MESSAGE TOW COUNT = 17 MSB OF ACTUAL TOW COUNT AT START OF NEXT 12-SECOND MESSAGE

Figure 30-10. Message Type 37 - Clock & Midi Almanac

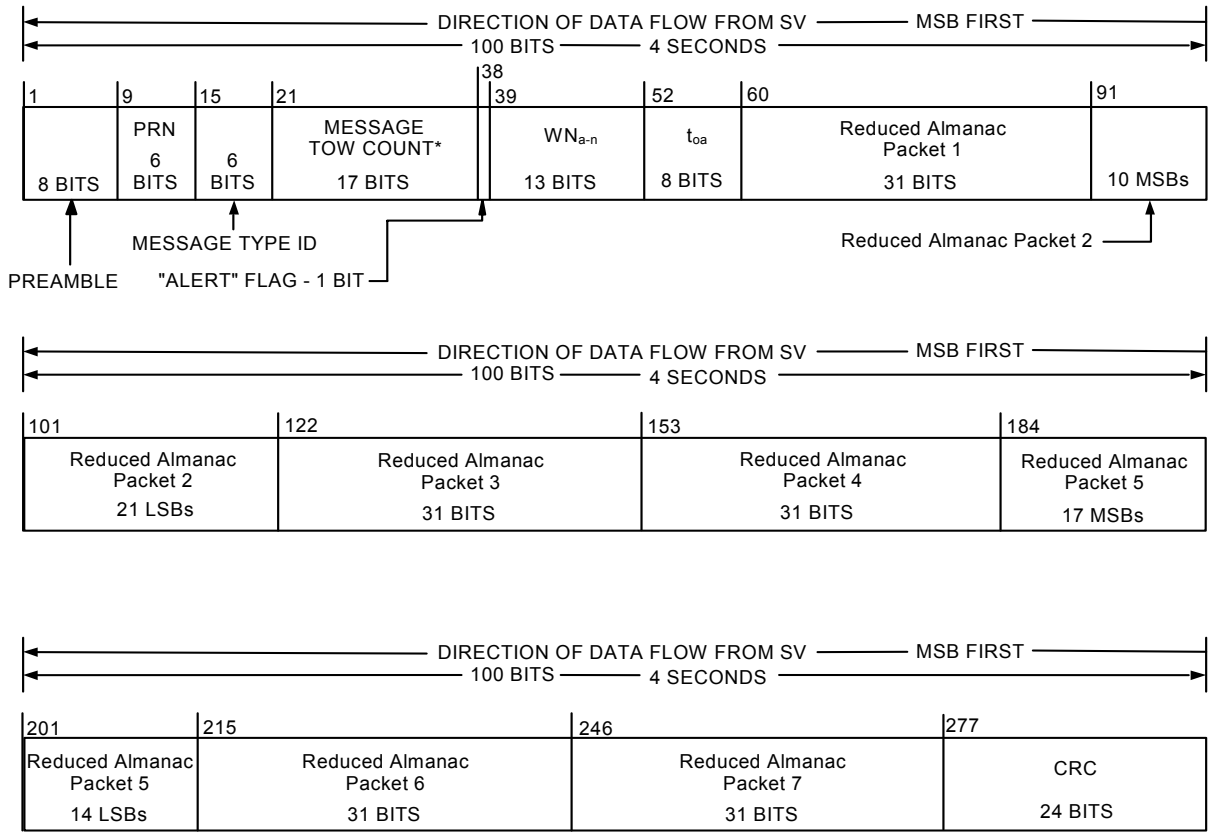

* MESSAGE TOW COUNT = 17 MSB OF ACTUAL TOW COUNT AT START OF NEXT 12-SECOND MESSAGE

Figure 30-11. Message Type 12 - Reduced Almanac

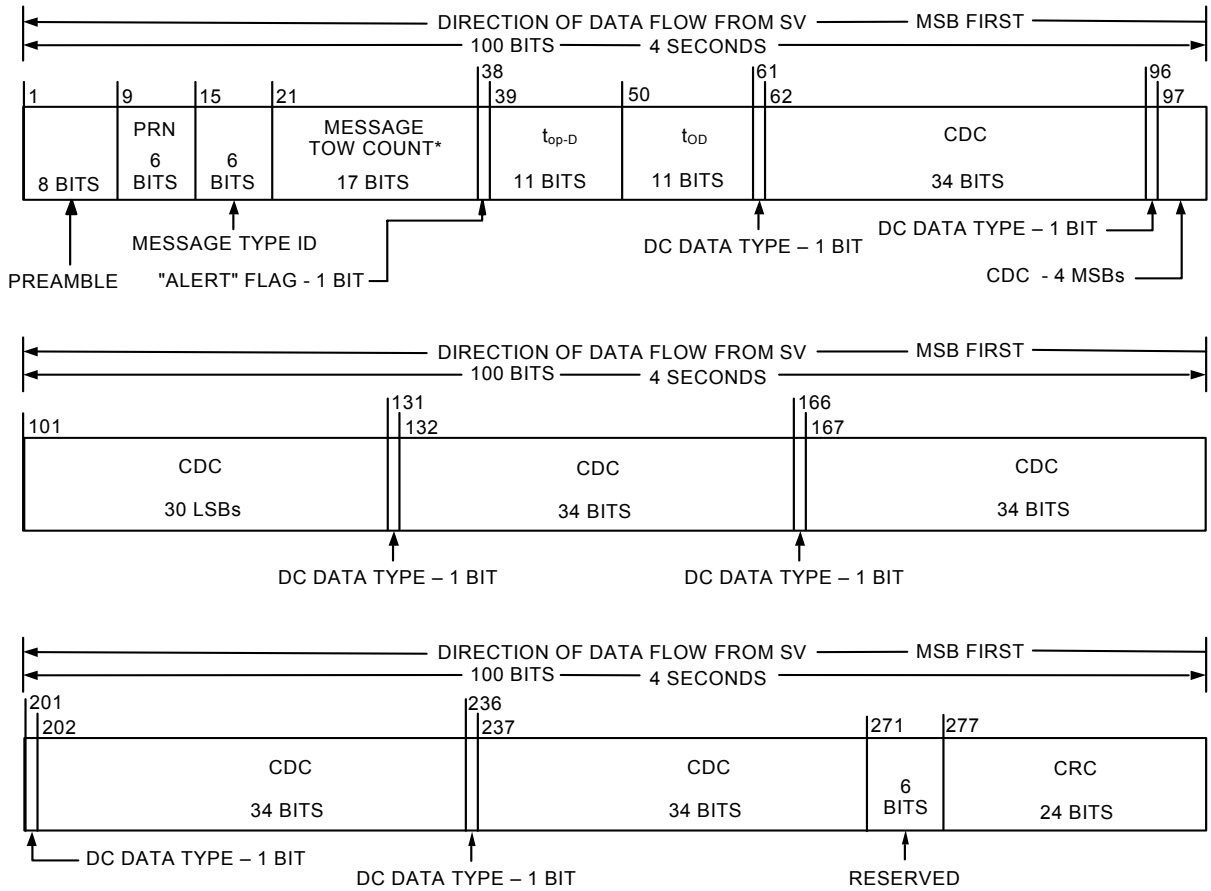

* MESSAGE TOW COUNT = 17 MSB OF ACTUAL TOW COUNT AT START OF NEXT 12-SECOND MESSAGE

CDC = Clock Differential Correction

Figure 30-12. Message Type 13 – Clock Differential Correction

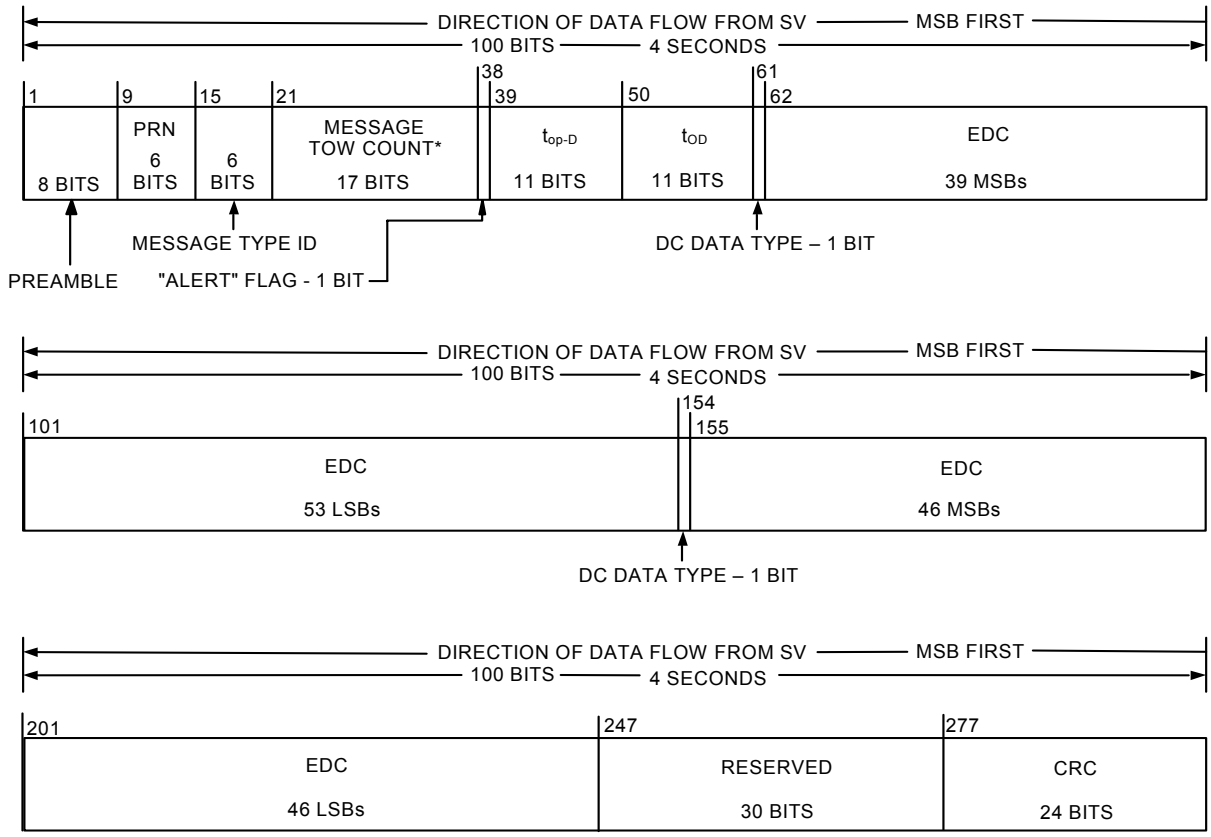

* MESSAGE TOW COUNT = 17 MSB OF ACTUAL TOW COUNT AT START OF NEXT 12-SECOND MESSAGE

EDC = Ephemeris Differential Correction

Figure 30-13. Message Type 14 – Ephemeris Differential Correction

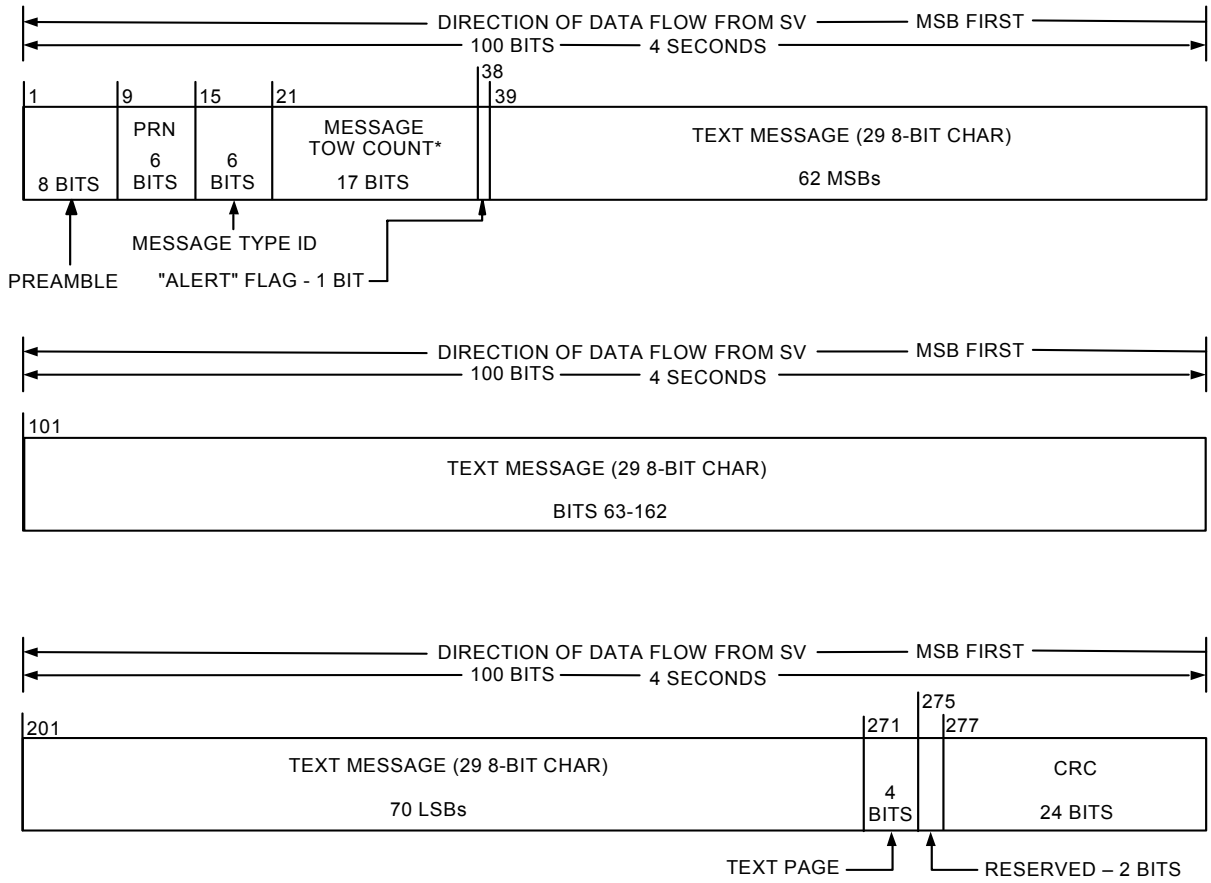

* MESSAGE TOW COUNT = 17 MSB OF ACTUAL TOW COUNT AT START OF NEXT 12-SECOND MESSAGE

Figure 30-14. Message Type 15 - Text

30.3.3.1 Message Type 10 and 11 Ephemeris and Health Parameters.

30.3.3.1.1 Message Type 10 and 11 Ephemeris and Health Parameter Content. The contents of the SV health, ephemeris representation and accuracy parameters in message types 10 and 11 are defined below, followed by material pertinent to the use of the data. Message type 10 in conjunction with message type 11, provide users with the requisite data to calculate SV position. The general format of message types 10 and 11 consist of data fields for reference time tags, a set of gravitational harmonic correction terms, rates and rate corrections to quasi-Keplerian elements, and an accuracy indicator for ephemeris-related data.

The ephemeris parameters in the message type 10 and type 11 describe the orbit of the transmitting SV during the curve fit interval of three hours. The nominal transmission interval is two hours, and shall coincide with the first two hours of the curve fit interval. The period of applicability for ephemeris data coincides with the entire three-hour curve fit interval. Table 30-I gives the definition of the orbital parameters using terminology typical of Keplerian orbital parameters; it is noted, however, that the transmitted parameter values are expressed such that they provide the best trajectory fit in Earth-Centered, Earth-Fixed (ECEF) coordinates for each specific fit interval. The user shall not interpret intermediate coordinate values as pertaining to any conventional coordinate system.

Any change in the Message Type 10 and 11 ephemeris data will be accomplished with a simultaneous change in the t_{oe} value. The CS will assure that the t_{oe} value, for at least the first data set transmitted by an SV after an upload, is different from that transmitted prior to the cutover. See Section 20.3.4.5 for additional information regarding t_{oe}.

30.3.3.1.1.1 Transmission Week Number. Bits 39 through 51 of message type 10 shall contain 13 bits which are a modulo-8192 binary representation of the current GPS week number at the start of the data set transmission interval (see paragraph 6.2.4). These 13 bits are comprised of 10 LSBs that represent the ten MSBs of the 29-bit Z-count as qualified in paragraph 20.3.3.3.1.1, and 3 MSBs which are extra bits that extend the range of transmission week number from 10 to 13 bits.

30.3.3.1.1.2 Signal Health (L1/L2/L5). The three, one-bit, health indication in bits 52 through 54 of message type 10 refers to the L1, L2, and L5 signals of the transmitting SV. The health of each signal is indicated by:

0 = Signal OK,

1 = Signal bad or unavailable.

The predicted health data will be updated at the time of upload when a new data set has been built by the CS. The transmitted health data may not correspond to the actual health of the transmitting SV.

Additional SV health data are given in the almanac in messages types 12, 31, and 37. The data given in message type 10 may differ from that shown in other messages of the transmitting SV and/or other SVs since the latter may be updated at a different time.

30.3.3.1.1.3 Data Predict Time of Week. Bits 55 through 65 of message type 10 shall contain the data predict time of week (t_{op}). The t_{op} term provides the epoch time of week of the state estimate utilized for the prediction of satellite quasi-Keplerian ephemeris parameters.

30.3.3.1.1.4 SV Accuracy. Bits 66 through 70 of message type 10 shall contain the ephemeris User Range Accuracy (URA_{oe}) index of the SV for the unauthorized (non-Precise Positioning Service) user. URA_{oe} index shall provide the ephemeris-related user range accuracy index of the SV as a function of the current ephemeris message curve fit interval. While the ephemeris-related URA may vary over the ephemeris message curve fit interval, the URA_{oe} index (N) in message type 10 shall correspond to the maximum URA_{oe} expected over the entire curve fit interval.

The URA_{oe} index is a signed, two's complement integer in the range of +15 to –16 and has the following relationship to the ephemeris URA:

URA_{oe} Index	URA_{oe} (meters)				
15	6144.00	<	URA_{oe}		
14	3072.00	<	URA_{oe}	≤	6144.00
13	1536.00	<	URA_{oe}	≤	3072.00
12	768.00	<	URA_{oe}	≤	1536.00
11	384.00	<	URA_{oe}	≤	768.00
10	192.00	<	URA_{oe}	≤	384.00
9	96.00	<	URA_{oe}	≤	192.00
8	48.00	<	URA_{oe}	≤	96.00
7	24.00	<	URA_{oe}	≤	48.00
6	13.65	<	URA_{oe}	≤	24.00
5	9.65	<	URA_{oe}	≤	13.65
4	6.85	<	URA_{oe}	≤	9.65
3	4.85	<	URA_{oe}	≤	6.85
2	3.40	<	URA_{oe}	≤	4.85
1	2.40	<	URA_{oe}	≤	3.40
0	1.70	<	URA_{oe}	≤	2.40
-1	1.20	<	URA_{oe}	≤	1.70
-2	0.85	<	URA_{oe}	≤	1.20
-3	0.60	<	URA_{oe}	≤	0.85
-4	0.43	<	URA_{oe}	≤	0.60
-5	0.30	<	URA_{oe}	≤	0.43
-6	0.21	<	URA_{oe}	≤	0.30
-7	0.15	<	URA_{oe}	≤	0.21
-8	0.11	<	URA_{oe}	≤	0.15
-9	0.08	<	URA_{oe}	≤	0.11
-10	0.06	<	URA_{oe}	≤	0.08
-11	0.04	<	URA_{oe}	≤	0.06
-12	0.03	<	URA_{oe}	≤	0.04
-13	0.02	<	URA_{oe}	≤	0.03
-14	0.01	<	URA_{oe}	≤	0.02
-15			URA_{oe}	≤	0.01
-16	No accuracy prediction available—use at own risk				

30.3.3.1.2 Message Type 10 and 11 Ephemeris Parameter Characteristics. For each ephemeris parameter contained in message types 10 and 11, the number of bits, the scale factor of the least significant bit (LSB) (which is the last bit received), the range, and the units are as specified in Table 30-I. See Figures 30-1 and 30-2 for complete bit allocation in message types 10 and 11.

30.3.3.1.3 User Algorithm for Determination of SV Position. The user shall compute the ECEF coordinates of position for the SV's antenna phase center (APC) utilizing a variation of the equations shown in Table 30-II. The ephemeris parameters are Keplerian in appearance; however, the values of these parameters are produced by the CS via a least squares curve fit of the predicted ephemeris of the SV APC (time-position quadruples: t, x, y, z expressed in ECEF coordinates). Particulars concerning the applicable coordinate system are given in Sections 20.3.3.4.3.3 and 20.3.3.4.3.4.

The sensitivity of the SV's position to small perturbations in most ephemeris parameters is extreme. The sensitivity of position to the parameters A, C_{rc-n}, and C_{rs-n} is about one meter/meter. The sensitivity of position to the angular parameters is on the order of 10^8 meters/semi-circle, and to the angular rate parameters is on the order of 10^{12} meters/semi-circle/second. Because of this extreme sensitivity to angular perturbations, the value of π used in the curve fit is given here. π is a mathematical constant, the ratio of a circle's circumference to its diameter. Here π is taken as 3.1415926535898.

Table 30-I. Message Types 10 and 11 Parameters (1 of 2)					
Parameter		No. of Bits**	Scale Factor (LSB)	Effective Range***	Units
Week No.		13	1		weeks
SV accuracy		5*			(see text)
Signal health (L1/L2/L5)		3	1		(see text)
t_{op}	Data predict time of week	11	300	604,500	seconds
ΔA ****	Semi-major axis difference at reference time	26*	2^{-9}		meters
$\dot{A}$	Change rate in semi-major axis	25*	2^{-21}		meters/sec
Δn_0	Mean Motion difference from computed value at reference time	17*	2^{-44}		semi-circles/sec
$\Delta \dot{n}_0$	Rate of mean motion difference from computed value	23*	2^{-57}		semi-circles/sec^2
M_{0-n}	Mean anomaly at reference time	33*	2^{-32}		semi-circles
e_n	Eccentricity	33	2^{-34}	0.03	dimensionless
ω_n	Argument of perigee	33*	2^{-32}		semi-circles

* Parameters so indicated are two's complement, with the sign bit (+ or -) occupying the MSB;

** See Figure 30-1 for complete bit allocation in Message Type 10;

*** Unless otherwise indicated in this column, effective range is the maximum range attainable with indicated bit allocation and scale factor.

**** Relative to A_{REF} = 26,559,710 meters.

Table 30-I. Message Types 10 and 11 Parameters (2 of 2)

Parameter		No. of Bits**	Scale Factor (LSB)	Effective Range***	Units
t_{oe}	Ephemeris data reference time of week	11	300	604,500	seconds
$\Omega_{0\text{-}n}$****	Reference right ascension angle	33*	2^{-32}		semi-circles
$\Delta\dot{\Omega}$ *****	Rate of right ascension difference	17*	2^{-44}		semi-circles/sec
$i_{0\text{-}n}$	Inclination angle at reference time	33*	2^{-32}		semi-circles
$i_{0\text{-}n}$ –DOT	Rate of inclination angle	15*	2^{-44}		semi-circles/sec
$C_{is\text{-}n}$	Amplitude of the sine harmonic correction term to the angle of inclination	16*	2^{-30}		radians
$C_{ic\text{-}n}$	Amplitude of the cosine harmonic correction term to the angle of inclination	16*	2^{-30}		radians
$C_{rs\text{-}n}$	Amplitude of the sine correction term to the orbit radius	24*	2^{-8}		meters
$C_{rc\text{-}n}$	Amplitude of the cosine correction term to the orbit radius	24*	2^{-8}		meters
$C_{us\text{-}n}$	Amplitude of the sine harmonic correction term to the argument of latitude	21*	2^{-30}		radians
$C_{uc\text{-}n}$	Amplitude of the sine harmonic correction term to the argument of latitude	21*	2^{-30}		radians

* Parameters so indicated are two's complement, with the sign bit (+ or -) occupying the MSB;

** See Figure 30-1 and Figure 30-2 for complete bit allocation in Message Types 10 and 11;

*** Unless otherwise indicated in this column, effective range is the maximum range attainable with indicated bit allocation and scale factor.

**** $\Omega_{0\text{-}n}$ is the right ascension angle at the weekly epoch ($\Omega_{0\text{-}w}$) propagated to the reference time at the rate of right ascension {$\dot{\Omega}_{REF}$ Table 30-II }.

***** Relative to $\dot{\Omega}_{REF} = -2.6 \times 10^{-9}$ semi-circles/second.

Table 30-II. Elements of Coordinate System (part 1 of 2)	
Element/Equation	**Description**
$\mu = 3.986005 \times 10^{14}$ meters^3/sec^2	WGS 84 value of the earth's gravitational constant for GPS user
$\dot{\Omega}_e = 7.2921151467 \times 10^{-5}$ rad/sec	WGS 84 value of the earth's rotation rate
$A_0 = A_{REF} + \Delta A$ *	Semi-Major Axis at reference time
$A_k = A_0 + (\dot{A})\, t_k$	Semi-Major Axis
$n_0 = \sqrt{\dfrac{\mu}{A_0^{\,3}}}$	Computed Mean Motion (rad/sec)
$t_k = t - t_{oe}$ **	Time from ephemeris reference time
$\Delta n_A = \Delta n_0 + ½\, \Delta\dot{n}_0\, t_k$	Mean motion difference from computed value
$n_A = n_0 + \Delta n_A$	Corrected Mean Motion
$M_k = M_0 + n_A\, t_k$	Mean Anomaly
$M_k = E_k - e_n \sin E_k$	Kepler's equation for Eccentric Anomaly (radians) (may be solved by iteration)
$\nu_k = \tan^{-1}\left\{\dfrac{\sin \nu_k}{\cos \nu_k}\right\}$	True Anomaly
$= \tan^{-1}\left\{\dfrac{\sqrt{1-e_n^{\,2}}\, \sin E_k \,/\, (1 - e_n \cos E_k)}{(\cos E_k - e_n) / (1 - e_n \cos E_k)}\right\}$	
$E_k = \cos^{-1}\left\{\dfrac{e_n + \cos \nu_k}{1 + e_n \cos \nu_k}\right\}$	Eccentric Anomaly

* $A_{REF} = 26{,}559{,}710$ meters

** **t** is GPS system time at time of transmission, i.e., GPS time corrected for transit time (range/speed of light). Furthermore, t_k shall be the actual total difference between the time **t** and the epoch time t_{oe}, and must account for beginning or end of week crossovers. That is if t_k is greater than 302,400 seconds, subtract 604,800 seconds from t_k. If t_k is less than -302,400 seconds, add 604,800 seconds to t_k.

Table 30-II. Elements of Coordinate System (part 2 of 2)	
Element/Equation *	**Description**
$\Phi_k = \nu_k + \omega_n$	Argument of Latitude
$\delta u_k = C_{us\text{-}n}\sin 2\Phi_k + C_{uc\text{-}n}\cos 2\Phi_k$	Argument of Latitude Correction } Second Harmonic Perturbations
$\delta r_k = C_{rs\text{-}n}\sin 2\Phi_k + C_{rc\text{-}n}\cos 2\Phi_k$	Radial Correction } Second Harmonic Perturbations
$\delta i_k = C_{is\text{-}n}\sin 2\Phi_k + C_{ic\text{-}n}\cos 2\Phi_k$	Inclination Correction } Second Harmonic Perturbations
$u_k = \Phi_k + \delta u_k$	Corrected Argument of Latitude
$r_k = A_k(1 - e_n \cos E_k) + \delta r_k$	Corrected Radius
$i_k = i_{o\text{-}n} + (i_{o\text{-}n}\text{-DOT})t_k + \delta i_k$	Corrected Inclination
$x_k' = r_k \cos u_k$ }	Positions in orbital plane
$y_k' = r_k \sin u_k$ }	Positions in orbital plane
$\dot{\Omega} = \dot{\Omega}_{REF} + \Delta\dot{\Omega}$ ***	Rate of Right Ascension
$\Omega_k = \Omega_{0\text{-}n} + (\dot{\Omega} - \dot{\Omega}_e)\, t_k - \dot{\Omega}_e\, t_{oe}$	Corrected Longitude of Ascending Node
$x_k = x_k' \cos \Omega_k - y_k' \cos i_k \sin \Omega_k$ }	Earth-fixed coordinates of SV antenna phase center
$y_k = x_k' \sin \Omega_k + y_k' \cos i_k \cos \Omega_k$ }	Earth-fixed coordinates of SV antenna phase center
$z_k = y_k' \sin i_k$ }	Earth-fixed coordinates of SV antenna phase center
*** $\dot{\Omega}_{REF} = -2.6 \times 10^{-9}$ semi-circles/second.	

30.3.3.2 Message Types 30 Through 37 SV Clock Correction Parameters.

30.3.3.2.1 Message Type 30 Through 37 SV Clock Correction Parameter Content. The clock parameters in any one of message types 30 through 37 describe the SV time scale during the period of validity. The clock parameters in a data set shall be valid during the interval of time in which they are transmitted and shall remain valid for an additional period of time after transmission of the next data set has started.

The general format of message types 30 through 37 includes data fields for SV clock correction coefficients. Any one of message types 30 through 37 in conjunction with message types 10 and 11 provide users with the requisite data to correct SV time and to calculate SV position precisely. In general, any message type 30's (i.e. 30-39) will provide SV clock correction parameters as described in this section.

30.3.3.2.1.1 SV Clock Correction. Any one of message types 30 through 37, Figure 30-3 through Figure 30-10, contains the parameters needed by the users for apparent SV clock correction. Bits 61 to 71 contain t_{oc} , clock data reference time of week. Bits 72 to 127 contain SV clock correction coefficients. The related algorithm is given in paragraph 20.3.3.3.3.1.

30.3.3.2.1.2 Data Predict Time of Week. Bits 39 through 49 of message types 30 through 37 shall contain the data predict time of week (t_{op}). The t_{op} term provides the epoch time of week of the state estimate utilized for the prediction of SV clock correction coefficients.

30.3.3.2.2 Clock Parameter Characteristics. The number of bits, the scale factor of the LSB (which is the last bit received), the range, and the units of clock correction parameters shall be as specified in Table 30-III.

30.3.3.2.3 User Algorithms for SV Clock Correction Data. The algorithms defined in paragraph 20.3.3.3.3.1 allow all users to correct the code phase time received from the SV with respect to both SV code phase offset and relativistic effects. However, since the SV clock corrections of equations in paragraph 20.3.3.3.3.1 are estimated by the CS using dual frequency L1 and L2 P(Y) code measurements, the single-frequency L1 or L2 user and the dual-frequency L1 C/A – L2 C users must apply additional terms to the SV clock correction equations. These terms are described in paragraph 30.3.3.3.1.

Table 30-III. Clock Correction and Accuracy Parameters					
Parameter		No. of Bits**	Scale Factor (LSB)	Effective Range***	Units
t_{oc}	Clock Data Reference Time of Week	11	300	604,500	seconds
URA_{oc} Index	SV Clock Accuracy Index	5*			(see text)
URA_{oc1} Index	SV Clock Accuracy Change Index	3			(see text)
URA_{oc2} Index	SV Clock Accuracy Change Rate Index	3			(see text)
a_{f2-n}	SV Clock Drift Rate Correction Coefficient	10*	2^{-60}		sec/sec^2
a_{f1-n}	SV Clock Drift Correction Coefficient	20*	2^{-48}		sec/sec
a_{f0-n}	SV Clock Bias Correction Coefficient	26*	2^{-35}		seconds

* Parameters so indicated are two's complement, with the sign bit (+ or -) occupying the MSB;
** See Figure 30-3 through 30-10 for complete bit allocation in Message types 30 to 37;
*** Unless otherwise indicated in this column, effective range is the maximum range attainable with indicated bit allocation and scale factor.

30.3.3.2.4 SV Clock Accuracy Estimates. Bits 50 through 54, and 55 through 57, and 58 through 60 of message types 30 through 37 shall contain the URA_{oc} Index,URA_{oc1} Index, and URA_{oc2} Index, respectively, of the SV (reference paragraph 6.2.1) for the unauthorized user. The URA_{oc} Index together with URA_{oc1} Index and URA_{oc2} Index shall give the clock-related user range accuracy of the SV as a function of time since the prediction (t_{op}) used to generate the uploaded clock correction polynomial terms.

The user shall calculate the clock-related URA with the equation (in meters);

$$URA_{oc} = URA_{ocb} + URA_{oc1}\,(t - t_{op}) \qquad \text{for } t\text{-}t_{op} \leq 93{,}600 \text{ seconds}$$

$$URA_{oc} = URA_{ocb} + URA_{oc1}\,(t - t_{op}) + URA_{oc2}\,(t - t_{op} - 93{,}600)^2 \qquad \text{for } t\text{-}t_{op} > 93{,}600 \text{ seconds}$$

where

t = GPS time (must account for beginning or end of week crossovers),

t_{op} = time of week of the state estimate utilized for the prediction of satellite clock correction parameters.

The CS shall derive URA_{ocb} at time t_{op} which, when used together with URA_{oc1} and URA_{oc2} in the above equations, results in the minimum URA_{oc} that is greater than the predicted URA_{oc} during the entire duration up to 14 days after t_{op}.

The user shall use the broadcast URA_{oc} Index to derive URA_{ocb}. The index is a signed, two's complement integer in the range of +15 to –16 and has the following relationship to the clock-related user derived URA_{ocb}:

URA_{oc} Index	URA_{ocb} (meters)				
15	6144.00	<	URA_{ocb}		
14	3072.00	<	URA_{ocb}	≤	6144.00
13	1536.00	<	URA_{ocb}	≤	3072.00
12	768.00	<	URA_{ocb}	≤	1536.00
11	384.00	<	URA_{ocb}	≤	768.00
10	192.00	<	URA_{ocb}	≤	384.00
9	96.00	<	URA_{ocb}	≤	192.00
8	48.00	<	URA_{ocb}	≤	96.00
7	24.00	<	URA_{ocb}	≤	48.00
6	13.65	<	URA_{ocb}	≤	24.00
5	9.65	<	URA_{ocb}	≤	13.65
4	6.85	<	URA_{ocb}	≤	9.65
3	4.85	<	URA_{ocb}	≤	6.85
2	3.40	<	URA_{ocb}	≤	4.85
1	2.40	<	URA_{ocb}	≤	3.40
0	1.70	<	URA_{ocb}	≤	2.40
-1	1.20	<	URA_{ocb}	≤	1.70
-2	0.85	<	URA_{ocb}	≤	1.20
-3	0.60	<	URA_{ocb}	≤	0.85
-4	0.43	<	URA_{ocb}	≤	0.60
-5	0.30	<	URA_{ocb}	≤	0.43
-6	0.21	<	URA_{ocb}	≤	0.30
-7	0.15	<	URA_{ocb}	≤	0.21
-8	0.11	<	URA_{ocb}	≤	0.15
-9	0.08	<	URA_{ocb}	≤	0.11
-10	0.06	<	URA_{ocb}	≤	0.08
-11	0.04	<	URA_{ocb}	≤	0.06
-12	0.03	<	URA_{ocb}	≤	0.04
-13	0.02	<	URA_{ocb}	≤	0.03
-14	0.01	<	URA_{ocb}	≤	0.02
-15			URA_{ocb}	≤	0.01
-16	No accuracy prediction available—use at own risk				

The user may use the upper bound value in the URA_{ocb} range corresponding to the broadcast index, thereby calculating the maximum URA_{oc} that is equal to or greater than the CS predicted URA_{oc}, or the user may use the lower bound value in the range which will provide the minimum URA_{oc} that is equal to or less than the CS predicted URA_{oc}.

The transmitted URA_{oc1} Index is an integer value in the range 0 to 7. URA_{oc1} Index has the following relationship to the URA_{oc1}:

$$URA_{oc1} = \frac{1}{2^N} \text{ (meters/second)}$$

where

$$N = 4 + URA_{oc1} \text{ Index}$$

The transmitted URA_{oc2} Index is an integer value in the range 0 to 7. URA_{oc2} Index has the following relationship to the URA_{oc2}:

$$URA_{oc2} = \frac{1}{2^N} \text{ (meters/second}^2\text{)}$$

where

$$N = 25 + URA_{oc2} \text{ Index}$$

30.3.3.3 Message Type 30 Ionospheric and Group Delay Correction Parameters.

30.3.3.3.1 Message Type 30 Ionospheric and Group Delay Correction Parameter Content. Message type 30 provides SV clock correction parameters (ref. Section 30.3.3.2) and ionospheric and group delay correction parameters. Bits 128 through 192 of message type 30 provide the group delay differential correction terms for L1, L2, and L5 signal users. Bits 193 through 256 provide the ionospheric correction parameters for single frequency user. The following algorithms shall apply when interpreting the correction parameters in the message.

30.3.3.3.1.1 Estimated L1-L2 Group Delay Differential. The group delay differential correction terms, T_{GD}, $ISC_{L1C/A}$, ISC_{L2C} for the benefit of single frequency L1 P, L1 C/A, L2 P, L2 C users and dual frequency L1/L2 users are contained in bits 128 through 166 of message type 30 (see Figure 30-3 for complete bit allocation). The bit length, scale factors, ranges, and units of these parameters are given in Table 30-IV. The bit string of "1000000000000" shall indicate that the group delay value is not available. The related algorithm is given in paragraphs 30.3.3.3.1.1.1 and 30.3.3.3.1.1.2.

Table 30-IV. Group Delay Differential Parameters ****

Parameter	No. of Bits**	Scale Factor (LSB)	Effective Range***	Units
T_{GD}	13*	2^{-35}		seconds
$ISC_{L1C/A}$	13*	2^{-35}		seconds
ISC_{L2C}	13*	2^{-35}		seconds

* Parameters so indicated are two's complement with the sign bit (+ or -) occupying the MSB;
** See Figure 30-3 for complete bit allocation in Message type 30;
*** Effective range is the maximum range attainable with indicated bit allocation and scale factor;
**** The bit string of "1000000000000" will indicate that the group delay value is not available.

30.3.3.3.1.1.1 Inter-Signal Group Delay Differential Correction. The correction terms, T_{GD}, $ISC_{L1C/A}$ and ISC_{L2C}, are initially provided by the CS to account for the effect of SV group delay differential between L1 P(Y) and L2 P(Y), L1 P(Y) and L1 C/A, and between L1 P(Y) and L2 C, respectively, based on measurements made by the SV contractor during SV manufacture. The values of T_{GD} and ISCs for each SV may be subsequently updated to reflect the actual on-orbit group delay differential. For maximum accuracy, the single frequency L1 C/A user must use the correction terms to make further modifications to the code phase offset in paragraph 20.3.3.3.3.1 with the equation:

$$(\Delta t_{SV})_{L1C/A} = \Delta t_{SV} - T_{GD} + ISC_{L1C/A}$$

where T_{GD} (see paragraph 20.3.3.3.3.2) and $ISC_{L1C/A}$ are provided to the user as Message Type 30 data, described in paragraph 30.3.3.3.1.1. For the single frequency L2 C user, the code phase offset modification is given by:

$$(\Delta t_{SV})_{L2C} = \Delta t_{SV} - T_{GD} + ISC_{L2C}$$

where, ISC_{L2C} is provided to the user as Message Type 30 data.

The values of $ISC_{L1C/A}$ and ISC_{L2C} are measured values that represent the mean SV group delay differential between the L1 P(Y)-code and the L1 C/A- or L2 C-codes respectively as follows,

$$ISC_{L1C/A} = t_{L1P(Y)} - t_{L1C/A}$$
$$ISC_{L2C} = t_{L1P(Y)} - t_{L2C}.$$

where, t_{Lix} is the GPS time the ith frequency x signal (a specific epoch of the signal) is transmitted from the SV antenna phase center.

30.3.3.3.1.1.2 L1 /L2 Ionospheric Correction. The two frequency (L1 C/A and L2 C) user shall correct for the group delay and ionospheric effects by applying the relationship:

$$PR = \frac{(PR_{L2C} - \gamma_{12} PR_{L1C/A}) + c\,(ISC_{L2C} - \gamma_{12} ISC_{L1C/A})}{1 - \gamma_{12}} - c\,T_{GD}$$

where,

PR = pseudorange corrected for ionospheric effects,

PR_i = pseudorange measured on the channel indicated by the subscript,

ISC_i = inter-signal correction for the channel indicated by the subscript (see paragraph 30.3.3.3.1.1),

T_{GD} = see paragraph 20.3.3.3.3.2,

c = speed of light,

and where, denoting the nominal center frequencies of L1 and L2 as f_{L1} and f_{L2} respectively,

$\gamma_{12} = (f_{L1}/f_{L2})^2 = (1575.42/1227.6)^2 = (77/60)^2$.

30.3.3.3.1.2 Ionospheric Data. The ionospheric parameters which allow the "L1 only" or "L2 only" user to utilize the ionospheric model for computation of the ionospheric delay are contained in Message Type 30. The "one frequency" user should use the model given in paragraph 20.3.3.5.2.5 to make this correction for the ionospheric effects. The bit lengths, scale factors, ranges, and units of these parameters are given in Table 20-X.

The ionospheric data shall be updated by the CS at least once every six days while the CS is able to upload the SVs. If the CS is unable to upload the SVs, the ionospheric data transmitted by the SVs may not be accurate.

30.3.3.4 Message Types 31, 12, and 37 Almanac Parameters. The almanac parameters are provided in any one of message types 31, 37, and 12. Message type 37 provides Midi almanac parameters and the reduced almanac parameters are provided in either message type 31 or type 12. The SV shall broadcast both message types 31 (and/or 12) and 37. However, the reduced almanac parameters (i.e. message types 31 and/or 12) for the complete set of SVs in the constellation will be broadcast by a SV using shorter duration of time compared to the broadcast of the complete set of Midi almanac parameters (i.e. message type 37). The parameters are defined below, followed by material pertinent to the use of the data.

30.3.3.4.1 Almanac Reference Week. Bits 39 through 51 of message type 12, and bits 128 through 140 of message types 31 and 37 shall indicate the number of the week (WN_{a-n}) to which the almanac reference time (t_{oa}) is referenced (see paragraph 20.3.3.5.2.2). The WN_{a-n} term consists of 13 bits which shall be a modulo-8192 binary representation of the GPS week number (see paragraph 6.2.4) to which the t_{oa} is referenced. Bits 52 through 59 of message type 12, and bits 141 to 148 of message types 31 and 37 shall contain the value of t_{oa}, which is referenced to this WN_{a-n}.

30.3.3.4.2 Almanac Reference Time. See paragraph 20.3.3.5.2.2.

30.3.3.4.3 SV PRN Number. Bits 149 through 154 of message type 37 and bits 1 through 6 in each packet of reduced almanac shall specify PRN number of the SV whose almanac or reduced almanac, respectively, is provided in the message or in the packet.

30.3.3.4.4 Signal Health (L1/L2/L5). The three, one-bit, health indication in bits 155, 156, and 157 of message type 37 and bits 29,30 and 31 of each packet of reduced almanac refers to the L1, L2, and L5 signals of the SV whose PRN number is specified in the message or in the packet. For each health indicator, a "0" signifies that all navigation data are okay and "1" signifies that some or all navigation data are bad. The predicted health data will be updated at the time of upload when a new reduced almanac has been built by the CS. The transmitted health data may not correspond to the actual health of the transmitting SV or other SVs in the constellation.

30.3.3.4.5 Midi Almanac Parameter Content. Message type 37, Figure 30-10, provides Midi almanac data for a SV whose PRN number is specified in the message. The number of bits, the scale factor (LSB), the range, and the units of the almanac parameters are given in Table 30-V. The user algorithm is essentially the same as the user algorithm used for computing the precise ephemeris as specified in Table 20-IV. Other parameters appearing in the equations of Table 20-IV, but not provided by the Midi almanac with the reference values, are set to zero for SV position determination. See paragraph 20.3.3.5.2.3 for almanac time parameters.

30.3.3.4.6 Reduced Almanac Parameter Content. Message type 31, Figure 30-4, provides SV clock correction parameters (ref. Section 30.3.3.2) and reduced almanac data packets for 4 SVs. Message type 12, Figure 30-11, contains reduced almanac data packets for 7 SVs.

30.3.3.4.6.1 Reduced Almanac Data. Message type 31 or 12 contains reduced almanac data and SV health words for SVs in the constellation. The reduced almanac data of a SV is broadcast in a packet of 31 bits long, as described in Figure 30-15. The reduced almanac data are a subset of the almanac data which provide less precise ephemeris. The reduced almanac data values are provided relative to pre-specified reference values. The number of bits, the scale factor (LSB), the range, and the units of the reduced almanac parameters are given in Table 30-VI. The algorithms and other material related to the use of the reduced almanac data are given in Section 30.3.3.4.6.2.

The reduced almanac parameters shall be updated by the CS at least once every 3 days while the CS is able to upload the SVs. If the CS is unable to upload the SVs, the accuracy of the reduced almanac parameters transmitted by the SVs will degrade over time.

30.3.3.4.6.2 Reduced Almanac Packet. The following shall apply when interpreting the data provided in each packet of reduced almanac (see Figure 30-15).

30.3.3.4.6.2.1 Reduced Almanac. The reduced almanac data is provided in bits 7 through 28 of each packet. The data from a packet along with the reference values (see Table 30-VI) provide ephemeris with further reduced precision. The user algorithm is essentially the same as the user algorithm used for computing the precise ephemeris from the parameters of the message types 10 and 11 (see paragraph 30.3.3.1.3 and Table 30-II). Other parameters appearing in the equations of Table 30-II, but not provided by the reduced almanac with the reference values, are set to zero for SV position determination.

Table 30-V. Midi Almanac Parameters

Parameter	No. of Bits**	Scale Factor (LSB)	Effective Range***	Units
t_{oa}	8	2^{12}	602,112	seconds
e	11	2^{-16}		dimensionless
δ_i****	11*	2^{-14}		semi-circles
$\dot{\Omega}$	11*	2^{-33}		semi-circles/sec
$\sqrt{A}$	17	2^{-4}		$\sqrt{\text{meters}}$
Ω_0	16*	2^{-15}		semi-circles
ω	16*	2^{-15}		semi-circles
M_0	16*	2^{-15}		semi-circles
a_{f0}	11*	2^{-20}		seconds
a_{f1}	10*	2^{-37}		sec/sec

* Parameters so indicated shall be two's complement with the sign bit (+ or -) occupying the MSB;

** See Figure 30-10 for complete bit allocation in message type 37;

*** Unless otherwise indicated in this column, effective range is the maximum range attainable with indicated bit allocation and scale factor;

**** Relative to i_0 = 0.30 semi-circles.

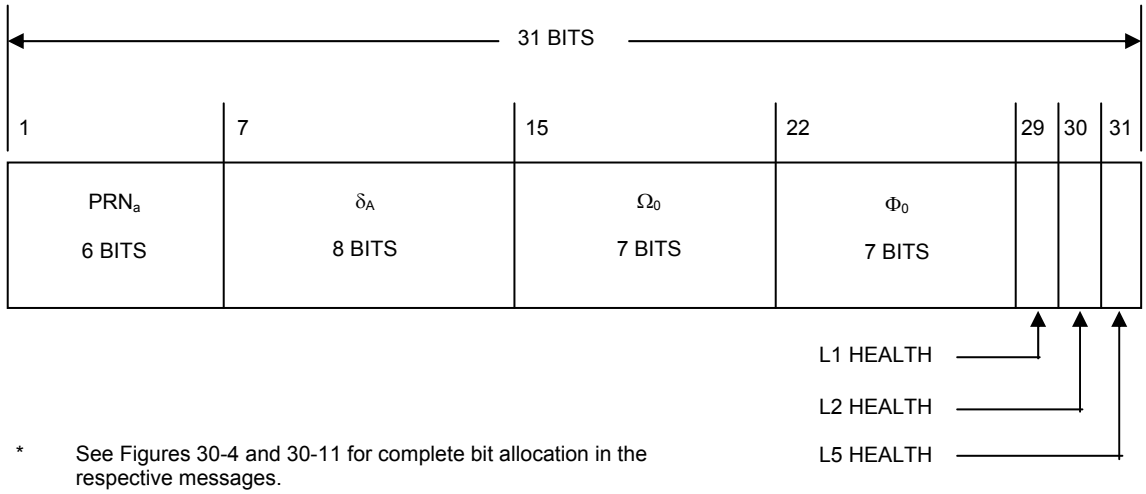

Figure 30-15. Reduced Almanac Packet Content

Table 30-VI. Reduced Almanac Parameters *****				
Parameter	No. of Bits	Scale Factor (LSB)	Effective Range **	Units
δ_A ***	8 *	2^{+9}	**	meters
Ω_0	7 *	2^{-6}	**	semi-circles
Φ_0 ****	7 *	2^{-6}	**	semi-circles

* Parameters so indicated shall be two's complement with the sign bit (+ or -) occupying the MSB;

** Effective range is the maximum range attainable with indicated bit allocation and scale factor;

*** Relative to A_{ref} = 26,559,710 meters;

**** Φ_0 = Argument of Latitude at Reference Time = $M_0 + \omega$;

***** Relative to following reference values:

$e = 0$

$\delta_i = +0.0056$ semi-circles (i = 55 degrees)

$\dot{\Omega} = -2.6 \times 10^{-9}$ semi-circles/second.

30.3.3.5 Message Type 32 Earth Orientation Parameters (EOP). The earth orientation parameters are provided in message type 32. The parameters are defined below, followed by material pertinent to the use of the data.

30.3.3.5.1 EOP Content. Message type 32, Figure 30-5, provides SV clock correction parameters (ref. Section 30.3.3.2) and earth orientation parameters. The EOP message provides users with parameters to construct the ECEF and ECI coordinate transformation (a simple transformation method is defined in Section 20.3.3.4.3.3.2). The number of bits, scale factors (LSBs), the range, and the units of all EOP fields of message type 32 are given in Table 30-VII.

30.3.3.5.1.1 User Algorithm for Application of the EOP. The EOP fields in the message type 32 contain the EOP needed to construct the ECEF-to-ECI coordinate transformation. The user computes the ECEF position of the SV antenna phase center using the equations shown in Table 30-II. The coordinate transformation, for translating to the corresponding ECI SV antenna phase center position, is derived using the equations shown in Table 30-VIII. The coordinate systems are defined in Section 20.3.3.4.3.3

An ECI postion, R_{eci}, is related to an ECEF position, R_{ecef}, by a series of rotation matrices as following:

$$R_{ecef} = [A][B][C][D]\, R_{eci}$$

where the rotation matrices, A, B, C, and D, represent the effects of Polar Motion, Earth Rotation, Nutation and Precession, respectively. The message type 32 specifies the EOP parameters used in the construction of the Polar Motion, A, and Earth Rotation, B, matrices.

The rotation matrices, A, B, C and D are specified in terms of elementary rotation matrices, $R_i(\alpha)$, where α is a positive rotation about the ith-axis ordinate, as follows:

$$R_1(\alpha) = \begin{bmatrix} 1 & 0 & 0 \\ 0 & \cos(\alpha) & \sin(\alpha) \\ 0 & -\sin(\alpha) & \cos(\alpha) \end{bmatrix} \quad , \quad R_2(\alpha) = \begin{bmatrix} \cos(\alpha) & 0 & -\sin(\alpha) \\ 0 & 1 & 0 \\ \sin(\alpha) & 0 & \cos(\alpha) \end{bmatrix}$$

$$R_3(\alpha) = \begin{bmatrix} \cos(\alpha) & \sin(\alpha) & 0 \\ -\sin(\alpha) & \cos(\alpha) & 0 \\ 0 & 0 & 1 \end{bmatrix}$$

The user shall compute the Inertial-to-Geodetic rotation matrix, ABCD using the equations shown in Table 30-VIII.

Table 30-VII. Earth Orientation Parameters					
Parameter		No. of Bits**	Scale Factor (LSB)	Effective Range***	Units
t_{EOP}	EOP Data Reference Time	16	2^{4}	604,784	seconds
PM_X †	X-Axis Polar Motion Value at Reference Time.	21*	2^{-20}	1	arc-seconds
$PM_\dot{X}$	X-Axis Polar Motion Drift at Reference Time.	15*	2^{-21}	7.8125×10^{-3}	arc-seconds/day
PM_Y ††	Y-Axis Polar Motion Value at Reference Time.	21*	2^{-20}	1	arc-seconds
$PM_\dot{Y}$	Y-Axis Polar Motion Drift at Reference Time.	15*	2^{-21}	7.8125×10^{-3}	arc-seconds/day
ΔUT1 †††	UT1-UTC Difference at Reference Time.	31*	2^{-24}	64	seconds
$\Delta\dot{UT1}$ †††	Rate of UT1-UTC Difference at Reference Time	19*	2^{-25}	7.8125×10^{-3}	seconds/day

* Parameters so indicated are two's complement, with the sign bit (+ or -) occupying the MSB;

** See Figure 30-5 for complete bit allocation in Message type 32;

*** Unless otherwise indicated in this column, effective range is the maximum range attainable with indicated bit allocation and scale factor.

† Represents the predicted angular displacement of instantaneous Celestial Ephemeris Pole with respect to semi-minor axis of the reference ellipsoid along Greenwich meridian.

†† Represents the predicted angular displacement of instantaneous Celestial Ephemeris Pole with respect to semi-minor axis of the reference ellipsoid on a line directed 90° west of Greenwich meridian.

††† With zonal tides restored.

Table 30-VIII. Application of EOP Parameters (Part 1 of 2)	
Element/Equation	Description
$TDT = t + 51^{s}.184$	Compute Terrestrial Dynamical Time relative to GPS Time t
J.E.D. = TDT expressed in days of 86400 sec	Compute Julian Ephemeris Date
$g = \frac{\pi}{180^\circ}\left[357^\circ.528 + 35999^\circ.05\ \frac{J.E.D. - 2451545}{36525}\right]$	Compute Mean Anomaly of Earth in its orbit, g
$J.B.D. = J.E.D. + \frac{0^{s}.001658 \sin(g + 0.0167 \sin g)}{86400s}$	Compute Julian Date in Barycentric Dynamical Time
$T = \frac{J.B.D. - 2451545}{36525}$	Compute time from J2000 Julian Epoch in Julian Centuries
$\zeta = 2306''.2181\ T + 0''.30188\ T^2 + 0''.017998\ T^3$ $z = 2306''.2181\ T + 1''.09468\ T^2 + 0''.018203\ T^3$ $\theta = 2004''.3109\ T - 0''.42665\ T^2 - 0''.041833\ T^3$	Compute Precession Fundamental Angles at time t
$D = R_3\left(-90^o - z\right) R_1(\theta)\ R_3\left(90^o - \zeta\right)$	Calculate Precession Matrix at time, t
$\bar{\varepsilon} = 23^\circ 26' 21''.448 - 46''.815\ T - 0''.00059\ T^2 + 0''.001813\ T^3$	Compute Mean Obliquity, $\bar{\varepsilon}$, at time t
$C = R_1\left(-(\bar{\varepsilon} + \Delta\varepsilon)\right) R_3\left(-\Delta\psi\right) R_1\left(\bar{\varepsilon}\right)$	Compute Nutation Matrix at time, t

Table 30-VIII. Application of EOP Parameters (Part 2 of 2)	
Element/Equation	Description
$\Delta\psi = \sum_{i=1}^{106} a_i \sin\left(\sum_{j=1}^{5} e_j E_j\right)$ ††	Nutation in Longitude
$\Delta\varepsilon = \sum_{i=1}^{64} b_i \cos\left(\sum_{j=1}^{5} e_j E_j\right)$ ††	Nutation in Obliquity
$UT1 = UTC + \Delta UT1 + \Delta\dot{UT1}\,(t - t_{EOP})$	Compute Universal Time at time t
$T_U = \frac{J.D. - 2451545}{36525}$ where $J.D. = UT1$ expressed in days of 86400 sec	Compute Universal Time from J2000 Julian Epoch in Julian Centuries
$\bar{\alpha} = \frac{2\pi}{24^h}\begin{pmatrix} UT1 + 6^h41^m50^s.54841 \\ + 8640184^s.812866T_U \\ + 0^s.093104T_U^2 - 6^s.2\times10^{-6}T_U^3 \end{pmatrix}$	Compute Mean Greenwich Hour Angle
$\alpha = \bar{\alpha} + \Delta\psi \cos(\bar{\varepsilon} + \Delta\varepsilon)$	Compute True Greenwich Hour Angle
$B = R_3(\alpha)$	Compute Rotation Matrix at time, t
$A = R_2(-x_p)\,R_1(-y_p)$ where $x_p = PM_X + PM_\dot{X}\,(t - t_{EOP})$ $y_p = PM_Y + PM_\dot{Y}\,(t - t_{EOP})$	Compute Polar Motion Matrix at time, t
$ABCD = [A][B][C][D]$	Compute Inertial-to-Geodetic Rotation matrix, ABCD

t is GPS system time at time of transmission, i.e., GPS time corrected for transit time (range/speed of light).

†† The Nutation in Longitude and the Nutation in Obliquity are as described in The Astronomical Almanac (1983), pp. S23-S26, evaluated at time T.

30.3.3.6 Message Type 33 Coordinated Universal Time (UTC) Parameters. Message type 33, Figure 30-6, contains the UTC parameters. The contents of message type 33 are defined below, followed by material pertinent to the use of the UTC data.

30.3.3.6.1 UTC Parameter Content. Message type 33 provides SV clock correction parameters (ref. Section 30.3.3.2) and also, shall contain the parameters related to correlating UTC (USNO) time with GPS Time. The bit lengths, scale factors, ranges, and units of these parameters are given in Table 30-IX. See Figure 30-6 for complete bit allocation in message type 33.

The parameters relating GPS time to UTC (USNO) shall be updated by the CS at least once every three days while the CS is able to upload the SVs. If the CS is unable to upload the SVs, the accuracy of the UTC parameters transmitted by the SVs will degrade over time.

30.3.3.6.2 UTC and GPS Time. Message type 33 includes: (1) the parameters needed to relate GPS Time to UTC(USNO), and (2) notice to the user regarding the scheduled future or recent past (relative to Nav message upload) value of the delta time due to leap seconds (Δt_{LSF}), together with the week number (WN_{LSF}) and the day number (DN) at the end of which the leap second becomes effective. Information required to use these parameters to calculate t_{UTC} is in paragraph 20.3.3.5.2.4 except the following definition of Δt_{UTC} shall be used.

$$\Delta t_{UTC} = \Delta t_{LS} + A_{0\text{-}n} + A_{1\text{-}n}\,(t_E - t_{ot} + 604800\,(WN - WN_{ot})) + A_{2\text{-}n}\,(t_E - t_{ot} + 604800\,(WN - WN_{ot}))^2 \text{ seconds}$$

Table 30-IX. UTC Parameters					
Parameter		No. of Bits**	Scale Factor (LSB)	Effective Range***	Units
A_{0-n}	Bias coefficient of GPS time scale relative to UTC time scale	16*	2^{-35}		Seconds
A_{1-n}	Drift coefficient of GPS time scale relative to UTC time scale	13*	2^{-51}		sec/sec
A_{2-n}	Drift rate correction coefficient of GPS time scale relative to UTC time scale	7*	2^{-68}		sec/sec^2
Δt_{LS}	Current or past leap second count	8*	1		seconds
t_{ot}	Time data reference Time of Week	16	2^4	604,784	seconds
WN_{ot}	Time data reference Week Number	13	1		weeks
WN_{LSF}	Leap second reference Week Number	8	1		weeks
DN	Leap second reference Day Number	4****	1		days
Δt_{LSF}	Current or future leap second count	8*	1		seconds

* Parameters so indicated shall be two's complement with the sign bit (+ or -) occupying the MSB;
** See Figure 30-6 for complete bit allocation;
*** Unless otherwise indicated in this column, effective range is the maximum range attainable with indicated bit allocation and scale factor;
**** Right justified.

30.3.3.7 Message Types 34, 13, and 14 Differential Correction Parameters. Differential Correction (DC) parameters are provided either in message types 34 or in types 13 and 14. These parameters provide users with sets of correction terms that apply to the clock and ephemeris data transmitted by *other* SVs. DC parameters are grouped in packets, as described in the next sections. The availability of these message types is subject to the control and determination of the CS.

30.3.3.7.1 Differential Correction Parameters Content. Message type 34 provides SV clock correction parameters (ref. Section 30.3.3.2) and also, shall contain DC parameters that apply to the clock and ephemeris data transmitted by another SV. One message type 34, Figure 30-7, shall contain 34 bits of clock differential correction (CDC) parameters and 92 bits of ephemeris differential correction (EDC) parameters for one SV other than the transmitting SV. Bit 150 of message type 34 shall be a DC Data Type indicator that indicates the data type for which the DC parameters apply. Zero (0) signifies that the corrections apply to CNAV data, $D_c(t)$, and one (1) signifies that the corrections apply to NAV data, D(t).

Message types 13 and 14 together also provide DC parameters. Message type 13, Figure 30-12, shall contain CDC parameters applicable to 6 SVs and message type 14, Figure 30-13, shall contain EDC parameters applicable to 2 SVs. There shall be a DC Data Type indicator preceding each CDC or EDC packet. The content of an individual data packet is depicted in Figure 30-16. The number of bits, scale factors (LSB), the range, and the units of all fields in the DC packet are given in Table 30-X.

30.3.3.7.2 DC Data Packet. Each DC data packet contains: corrections to SV clock polynomial coefficients provided in any one of the message types 30 to 37 of the corresponding SV; corrections to quasi-Keplerian elements referenced to t_{OD} of the corresponding SV; and User Differential Range Accuracy (UDRA) and $\dot{UDRA}$ indices that enable users to estimate the accuracy obtained after corrections are applied. Each DC packet is made up of two different segments. The first segment contains 34 bits for the CDC parameters and the second segment contains 92 bits of EDC parameters totaling 126 bits. The CDC and EDC parameters form an indivisible pair and users must utilize CDC and EDC as a pair. Users must utilize CDC and EDC data pair of same $t_{op\text{-}D}$ and of same t_{OD}.

30.3.3.7.2.1 Differential Correction Data Predict Time of Week. The DC data predict time of week ($t_{op\text{-}D}$) provides the epoch time of week, in increments of 300 seconds (i.e. five minutes), at which the prediction for the associated DC data was performed.

30.3.3.7.2.2 Time of Differential Correction Data. The time of DC data, t_{OD}, specifies the reference time of week, in increments of 300 seconds (i.e., five minutes) relative to the GPS week, for the associated CDC and EDC data.

30.3.3.7.2.3 SV PRN Identification. The PRN ID of both CDC and EDC of Figure 30-16 identifies the satellite to which the subject 126-bit differential correction packet data applies (by PRN code assignment). A value of all ones "11111111" in any PRN ID field shall indicate that no DC data is contained in the remainder of the data block. In this event, the remainder of the data block shall be filler bits, i.e., alternating ones and zeros beginning with one.

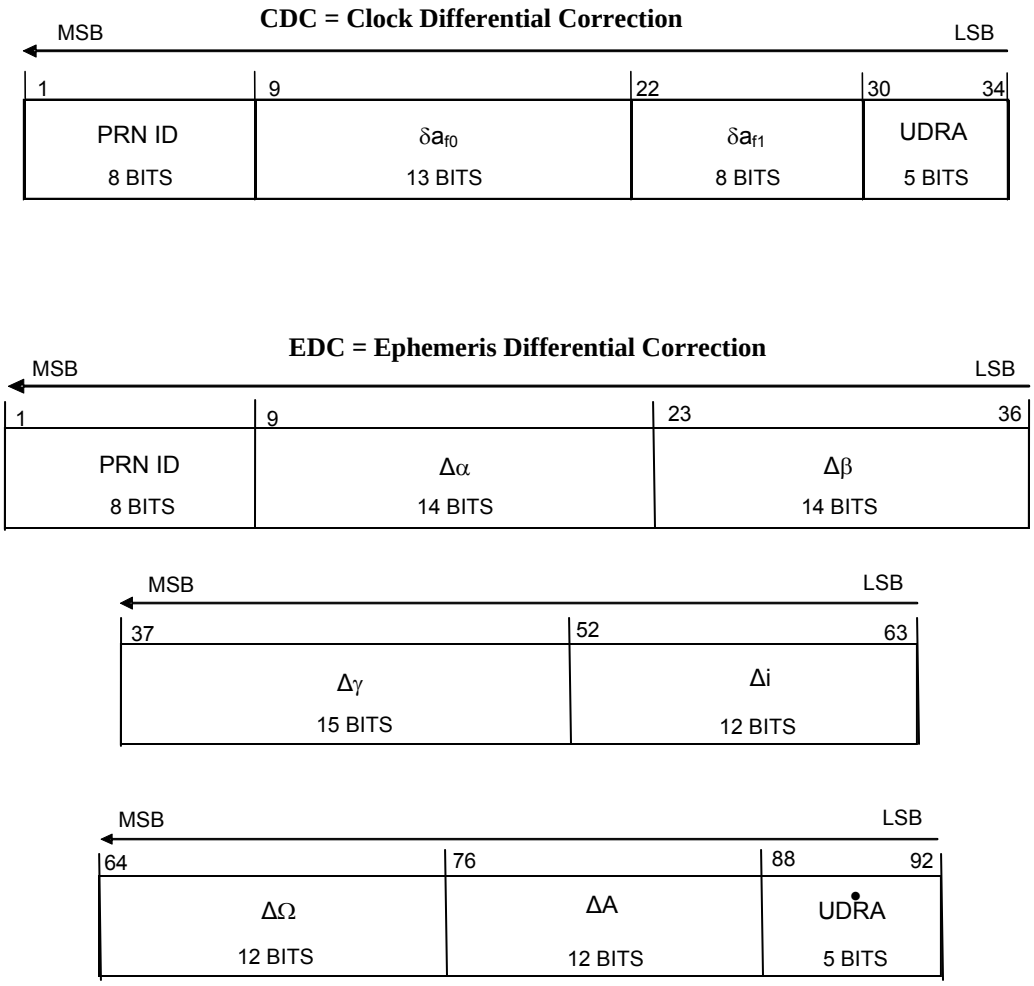

Figure 30-16. Differential Correction Data Packet

Table 30-X. Differential Correction Parameters

Parameter		No. of Bits**	Scale Factor (LSB)	Effective Range***	Units
PRN ID		8			see text
δa_{f0}	SV Clock Bias Correction	13*	2^{-35}		seconds
δa_{f1}	SV Clock Drift Correction	8*	2^{-51}		seconds/second
UDRA	User Differential Range Accuracy Index	5*			see text
$\Delta\alpha$	Alpha Correction to Ephemeris Parameters	14*	2^{-34}		dimensionless
$\Delta\beta$	Beta Correction to Ephemeris Parameters	14*	2^{-34}		dimensionless
$\Delta\gamma$	Gamma Correction to Ephemeris Parameters	15*	2^{-32}		semi-circles
Δi	Angle of Inclination Correction	12*	2^{-32}		semi-circles
$\Delta\Omega$	Angle of Right Ascension Correction	12*	2^{-32}		semi-circles
ΔA	Semi-Major Correction	12*	2^{-9}		meters
$\dot{UDRA}$	Change Rate of User Differential Range Accuracy Index.	5*			see text

* Parameters so indicated are two's complement, with the sign bit (+ or -) occupying the MSB;
** See Figure 30-7, 11 and 12 for complete bit allocation in Message types 34, 13 and 14;
*** Unless otherwise indicated in this column, effective range is the maximum range attainable with indicated bit allocation and scale factor.

30.3.3.7.3 Application of Clock-Related DC Data. The SV PRN code phase offset, uncorrected by clock correction coefficient updates, is given by equation 2 in paragraph 20.3.3.3.3.1 (see para. 30.3.3.2.3). If the matched pair of DC data for the subject SV is available, the user may apply clock correction coefficient update values by;

$$\Delta t_{sv} = (a_{f0} + \delta a_{f0}) + (a_{f1} + \delta a_{f1})(t - t_{oc}) + a_{f2}(t - t_{oc})^2 + \Delta t_r,$$

where δa_{f0} and δa_{f1}, (see Table 30-X), are given in message types 34 or 13, and all other terms are as stated in paragraph 20.3.3.3.3.1. Clock-related DC data shall not be applied to any SV transmitting clock correction parameters message(s) containing a t_{op} value greater than the $t_{op\text{-}D}$ value of messages types 34 or 13 containing the clock-related DC data.

30.3.3.7.4 Application of Orbit-Related DC Data. The DC data packet includes corrections to parameters that correct the state estimates for ephemeris parameters transmitted in the message types 10 and 11 (broadcast by the SV to which the DC data packet applies). The user will update the ephemeris parameters utilizing a variation of the algorithm expressed in the following equations. The user will then incorporate the updated quasi-Keplerian element set in all further calculations of SV position, as represented by the equations in Table 30-II (see para. 30.3.3.1.3). Ephemeris-related DC data shall not be applied to any SV transmitting message types 10 and 11 containing a t_{op} value greater than the $t_{op\text{-}D}$ value of message types 34 or 14 containing the ephemeris-related DC data.

The user will construct a set of initial (uncorrected) elements by:

$$A_i = A_0$$

$$e_i = e_n$$

$$i_i = i_{0\text{-}n}$$

$$\Omega_i = \Omega_{0\text{-}n}$$

$$\alpha_i = e_n \cos(\omega_n)$$

$$\beta_i = e_n \sin(\omega_n)$$

$$\gamma_i = M_{0\text{-}n} + \omega_n$$

where A_0, e_n, $i_{0\text{-}n}$, $\Omega_{0\text{-}n}$, ω_n and $M_{0\text{-}n}$ are obtained from the applicable SV's message types 10 and 11 data. The terms α_i, β_i, and γ_i form a subset of stabilized ephemeris elements which are subsequently corrected by $\Delta\alpha$, $\Delta\beta$ and $\Delta\gamma$—the values of which are supplied in the message types 34 or 14 — as follows:

$$\alpha_c = \alpha_i + \Delta\alpha$$

$$\beta_c = \beta_i + \Delta\beta$$

$$\gamma_c = \gamma_i + \Delta\gamma$$

The quasi-Keplerian elements are then corrected by

$$A_c = A_i + \Delta A$$

$$e_c = (\alpha_c^2 + \beta_c^2)^{1/2}$$

$$i_c = i_i + \Delta i$$

$$\Omega_c = \Omega_i + \Delta\Omega$$

$$\omega_c = \tan^{-1}(\beta_c/\alpha_c)$$

$$M_{0\text{-}c} = \gamma_c - \omega_c + \Delta M_0$$

where ΔA, Δi and $\Delta\Omega$ are provided in the EDC data packet of the message type 34 or 14 and ΔM_0 is obtained from

$$\Delta M_0 = -3\,\frac{\sqrt{\mu}}{A_c^{\,2}}\,[(t_{oe}) - (t_{OD})].$$

The corrected quasi-Keplerian elements above are applied to the user algorithm for determination of antenna phase center position in Section 30.3.3.1.3, Table 30-II.

30.3.3.7.5 SV Differential Range Accuracy Estimates. The $UDRA_{op\text{-}D}$ and $\dot{UDRA}$ shall give the differential user range accuracy for the SV. It must be noted that the two parameters provide estimated accuracy after both clock and ephemeris DC are applied. The UDRA and $\dot{UDRA}$ indices are signed, two's complement integers in the range of +15 to –16 and has the following relationship:

Index Value	$UDRA_{op\text{-}D}$ (meters)					$\dot{UDRA}$ (10^{-6} m/sec)
15	6144.00	<	$UDRA_{op\text{-}D}$		6144.00	
14	3072.00	<	$UDRA_{op\text{-}D}$	≤	6144.00	3072.00
13	1536.00	<	$UDRA_{op\text{-}D}$	≤	3072.00	1536.00
12	768.00	<	$UDRA_{op\text{-}D}$	≤	1536.00	768.00
11	384.00	<	$UDRA_{op\text{-}D}$	≤	768.00	384.00
10	192.00	<	$UDRA_{op\text{-}D}$	≤	384.00	192.00
9	96.00	<	$UDRA_{op\text{-}D}$	≤	192.00	96.00
8	48.00	<	$UDRA_{op\text{-}D}$	≤	96.00	48.00
7	24.00	<	$UDRA_{op\text{-}D}$	≤	48.00	24.00
6	13.65	<	$UDRA_{op\text{-}D}$	≤	24.00	13.65
5	9.65	<	$UDRA_{op\text{-}D}$	≤	13.65	9.65
4	6.85	<	$UDRA_{op\text{-}D}$	≤	9.65	6.85
3	4.85	<	$UDRA_{op\text{-}D}$	≤	6.85	4.85
2	3.40	<	$UDRA_{op\text{-}D}$	≤	4.85	3.40
1	2.40	<	$UDRA_{op\text{-}D}$	≤	3.40	2.40
0	1.70	<	$UDRA_{op\text{-}D}$	≤	2.40	1.70
-1	1.20	<	$UDRA_{op\text{-}D}$	≤	1.70	1.20
-2	0.85	<	$UDRA_{op\text{-}D}$	≤	1.20	0.85
-3	0.60	<	$UDRA_{op\text{-}D}$	≤	0.85	0.60
-4	0.43	<	$UDRA_{op\text{-}D}$	≤	0.60	0.43
-5	0.30	<	$UDRA_{op\text{-}D}$	≤	0.43	0.30
-6	0.21	<	$UDRA_{op\text{-}D}$	≤	0.30	0.21
-7	0.15	<	$UDRA_{op\text{-}D}$	≤	0.21	0.15
-8	0.11	<	$UDRA_{op\text{-}D}$	≤	0.15	0.11
-9	0.08	<	$UDRA_{op\text{-}D}$	≤	0.11	0.08
-10	0.06	<	$UDRA_{op\text{-}D}$	≤	0.08	0.06
-11	0.04	<	$UDRA_{op\text{-}D}$	≤	0.06	0.04
-12	0.03	<	$UDRA_{op\text{-}D}$	≤	0.04	0.03
-13	0.02	<	$UDRA_{op\text{-}D}$	≤	0.03	0.02
-14	0.01	<	$UDRA_{op\text{-}D}$	≤	0.02	0.01
-15			$UDRA_{op\text{-}D}$	≤	0.01	0.005
-16	No accuracy prediction available—use at own risk					

For any time, t_k, other than $t_{op\text{-}D}$, UDRA is found by,

$$UDRA = UDRA_{op\text{-}D} + \dot{UDRA}\,(t_k - t_{op\text{-}D})$$

30.3.3.8 Message Type 35 GPS/GNSS Time Offset. Message type 35, Figure 30-8, contains the GPS/Global Navigation Satellite System (GNSS) Time Offset (GGTO) parameters. The contents of message type 35 are defined below. The validity period of the GGTO shall be 1 day as a minimum.

30.3.3.8.1 GPS/GNSS Time Offset Parameter Content. Message Type 35 provides SV clock correction parameters (ref. Section 30.3.3.2) and also, shall contain the parameters related to correlating GPS time with other GNSS time. Bits 155 through 157 of message type 35 shall identify the other GPS like navigation system to which the offset data applies. The three bits are defined as follows;

000 = no data available,

001 = Galileo,

010 = GLONASS,

011 through 111 = reserved for other systems.

The number of bits, the scales factor (LSB), the range, and the units of the GGTO parameters are given in Table 30-XI. See Figure 30-8 for complete bit allocation in message type 35.

30.3.3.8.2 GPS and GNSS Time. The GPS/GNSS-time relationship is given by,

$$t_{GNSS} = t_E - (A_{0GGTO} + A_{1GGTO}\,(t_E - t_{otGGTO} + 604800\,(WN - WN_{otGGTO}) + A_{2GGTO}\,(t_E - t_{otGGTO} + 604800\,(WN - WN_{otGGTO}))^2)$$

where t_{GNSS} is in seconds, t_E and WN are as defined in Section 20.3.3.5.2.4, and the remaining parameters are as defined in Table 30-XI.

Table 30-XI. GPS/GNSS Time Offset Parameters					
Parameter		No. of Bits**	Scale Factor (LSB)	Effective Range***	Units
A_{0GGTO}	Bias coefficient of GPS time scale relative to GNSS time scale	16*	2^{-35}		seconds
A_{1GGTO}	Drift coefficient of GPS time scale relative to GNSS time scale	13*	2^{-51}		sec/sec
A_{2GGTO}	Drift rate correction coefficient of GPS time scale relative to GNSS time scale	7*	2^{-68}		sec/sec^2
t_{otGGTO}	Time data reference Time of Week	16	2^4	604,784	seconds
WN_{otGGTO}	Time data reference Week Number	13	2^0		weeks
GNSS ID	GNSS Type ID	3			see text

* Parameters so indicated shall be two's complement with the sign bit (+ or -) occupying the MSB;
** See Figure 30-8 for complete bit allocation;
*** Unless otherwise indicated in this column, effective range is the maximum range attainable with indicated bit allocation and scale factor.

30.3.3.9 Message Types 36 and 15 Text Messages. Text messages are provided either in message type 36, Figure 30-9, or type 15, Figure 30-14. The specific contents of text message will be at the discretion of the Operating Command. Message type 36 can accommodate the transmission of 18 eight-bit ASCII characters. Message type 15 can accommodate the transmission of 29 eight-bit ASCII characters. The requisite bits shall occupy bits 39 through 270 of message type 15 and bits 128 through 275 of message type 36. The eight-bit ASCII characters shall be limited to the set described in paragraph 20.3.3.5.1.8.

30.3.4 Timing Relationships. The following conventions shall apply.

30.3.4.1 Paging and Cutovers. Broadcast system of messages is completely arbitrary, but sequenced to provide optimum user performance. Message types 10 and 11 shall be broadcast at least once every 48 seconds. All other messages shall be broadcast in-between, not exceeding the maximum broadcast interval in Table 30-XII. Message type 15 will be broadcast as needed, but will not reduce the maximum broadcast interval of the other messages. Type 15 messages that are longer than one page will not necessarily be broadcast consecutively.

Table 30-XII. Message Broadcast Intervals

Message Data	**Message Type Number**	**Maximum Broadcast Intervals †**
Ephemeris	10 & 11	48 sec
Clock	Type 30's	48 sec
ISC, IONO	30 *	288 sec
Reduced Almanac	31* or 12	20 min**
Midi Almanac	37	120 min**
EOP	32*	30 min
UTC	33*	288 sec
Diff Correction	34* or 13 & 14	30 min***
GGTO	35*	288 sec
Text	36* or 15	As needed

* Also contains SV clock correction parameters.
** Complete set of SVs in the constellation.
*** When Differential Corrections are available.
† The intervals specified are maximum. As such, the broadcast intervals may be shorter than the specified value.

30.3.4.2 SV Time vs. GPS Time. In controlling the SVs and uploading of data, the CS shall allow for the following timing relationships:

a. Each SV operates on its own SV time;
b. All time-related data (TOW) in the messages shall be in SV-time;
c. All other data in the Nav message shall be relative to GPS time;
d. The acts of transmitting the Nav messages shall be executed by the SV on SV time.

30.3.4.3 Speed of Light. The speed of light used by the CS for generating the data described in the above paragraphs is

$c = 2.99792458 \times 10^8$ meters per second

which is the official WGS-84 speed of light. The user shall use the same value for the speed of light in all computations.

30.3.5 Data Frame Parity. The data signal contains parity coding according to the following conventions.

30.3.5.1 Parity Algorithm. Twenty-four bits of CRC parity will provide protection against burst as well as random errors with a probability of undetected error $\leq 2^{-24} = 5.96\times10^{-8}$ for all channel bit error probabilities ≤ 0.5. The CRC word is calculated in the forward direction on a given message using a seed of 0. The sequence of 24 bits $(p_1,p_2,...,p_{24})$ is generated from the sequence of information bits $(m_1,m_2,...,m_{276})$ in a given message. This is done by means of a code that is generated by the polynomial

$$g(X) = \sum_{i=0}^{24} g_i X^i$$

where

$$\begin{aligned} g_i &= 1 \quad \text{for} \quad i = 0,1,3,4,5,6,7,10,11,14,17,18,23,24 \\ &= 0 \quad \text{otherwise} \end{aligned}$$

This code is called CRC-24Q. The generator polynomial of this code is in the following form (using binary polynomial algebra):

$$g(X) = (1 + X)p(X)$$

where p(X) is the primitive and irreducible polynomial

$$p(X) = X^{23} + X^{17} + X^{13} + X^{12} + X^{11} + X^9 + X^8 + X^7 + X^5 + X^3 + 1$$

When, by the application of binary polynomial algebra, the above g(X) is divided into $m(X)X^{24}$, where the information sequence m(X) is expressed as

$$m(X) = m_k + m_{k-1}X + m_{k-2}X^2 + \cdots + m_1X^{k-1}$$

The result is a quotient and a remainder R(X) of degree < 24. The bit sequence formed by this remainder represents the parity check sequence. Parity bit p_i, for any i from 1 to 24, is the coefficient of X^{24-i} in R(X).

This code has the following characteristics:

1) It detects all single bit errors per code word.

2) It detects all double bit error combinations in a codeword because the generator polynomial g(X) has a factor of at least three terms.

3) It detects any odd number of errors because g(X) contains a factor 1+X.

4) It detects any burst error for which the length of the burst is ≤ 24 bits.

5) It detects most large error bursts with length greater than the parity length r = 24 bits. The fraction of error bursts of length b > 24 that are undetected is:

a) $2^{-24} = 5.96 \times 10^{-8}$, if b > 25 bits.

b) $2^{-23} = 1.19 \times 10^{-7}$, if b = 25 bits.

(This page intentionally left blank.)