INTERNATIONAL MARITIME ORGANIZATION

E

4 ALBERT EMBANKMENT
LONDON SE1 7SR
Telephone: +44 (0)20 7735 7611 Fax: +44 (0)20 7587 3210

Ref. T2-OSS/1.4

MSC.1/Circ.1294/Rev.2
15 February 2011

LONG-RANGE IDENTIFICATION AND TRACKING SYSTEM

TECHNICAL DOCUMENTATION (PART II)

1 The Maritime Safety Committee (the Committee), at its eighty-eighth session (24 November to 3 December 2010), considered and approved amendments to the Protocols and arrangements for the prototype, developmental, integration and modification testing phases of the LRIT system agreed by the *Ad Hoc* LRIT Group (the Group) at its ninth session (MSC 88/26, paragraph 6.17 refers). The present circular incorporates the aforesaid amendments, as well as the amendments approved by the Committee, at its eighty-sixth session (27 May to 5 June 2009), regarding the entitlement of Search and Rescue (SAR) services of SOLAS Contracting Governments to request and receive archived LRIT (MSC 86/26, paragraph 6.51 refers).

2 The Long-range identification and tracking system – Technical documentation (Part II)* includes:

.1 Protocols and arrangements for the prototype, developmental, integration and modification testing phases of the LRIT system;

.2 Procedures for the notification, reporting and recording of temporary suspensions of operations or reduction of the service provided; and

.3 Procedures for the consideration of proposals for the amendment of technical specifications for the LRIT system, the XML schemas and the test procedures and test cases.

3 The Technical documentation (Part II) should always be read together with SOLAS regulation V/19-1, the Revised performance standards and functional requirements for the long-range identification and tracking of ships adopted by resolution MSC.263(84) and the Technical documentation (Part I) which is set out in MSC.1/Circ.1259/Rev.4.

4 SOLAS Contracting Governments are invited to bring the present circular and its annex to the attention of those engaged in the establishment, testing and operation of their LRIT Data Centres.

* The Long-range identification and tracking system – Technical documentation (Part II) is available in English only in accordance with the decision of MSC 84.

PIRACY IMO ORCHESTRATING THE RESPONSE

5 The United States, as provider of the International LRIT Data Exchange on an interim basis, is invited to bring the present circular and its annex to the attention of those involved with the operation of the International LRIT Data Exchange.

6 Austria, Belgium, Bulgaria, Cyprus, the Czech Republic, Denmark, Estonia, Finland, France, Germany, Greece, Hungary, Ireland, Italy, Latvia, Lithuania, Luxembourg, Malta, the Netherlands, Poland, Portugal, Romania, Slovakia, Slovenia, Spain, Sweden and the United Kingdom (the proposing Contracting Governments), which had submitted a proposal for the establishment, maintenance and operation of the International LRIT Data Exchange as from 2011, are invited to bring the present circular to the attention of those engaged in the operation and/or maintenance of the International LRIT Data Exchange.

7 SOLAS Contracting Governments, LRIT Data Centres acting through SOLAS Contracting Government(s) which have established them, the International LRIT Data Exchange acting through the United States or the proposing Contracting Governments, as the case may be, and the LRIT Coordinator are also invited to bring to the attention of the Committee, at the earliest opportunity, the results of the experience gained from the use of the Technical documentation (Part II) for consideration of action to be taken.

8 This circular revokes MSC.1/Circ.1294/Rev.1 issued on 13 May 2010 and any reference to MSC.1/Circ.1294 or MSC.1/Circ.1294/Rev.1 should be read as reference to the present circular.

***

ANNEX
(English only)

LONG-RANGE IDENTIFICATION AND TRACKING SYSTEM

TECHNICAL DOCUMENTATION
(PART II)

1 The Technical documentation of the LRIT system is set out in two parts.

2 Part I of the Technical documentation, issued under cover of MSC.1/Circ.1259/Rev.4.

3 Part II of the Technical documentation is issued under this circular and includes the:

.1 Protocols and arrangements for the prototype, developmental, integration and modification testing phases of the LRIT system;

.2 Procedures for the notification, reporting and recording of temporary suspensions of operations or reduction of the service provided; and

.3 Procedures for the consideration of proposals for the amendment of technical specifications for the LRIT system, the XML schemas and the test procedures and test cases,

which are set out in annexes 1 to 3, respectively, to this circular.

ANNEX 1

PROTOCOLS AND ARRANGEMENTS FOR THE PROTOTYPE, DEVELOPMENTAL, INTEGRATION AND MODIFICATION TESTING PHASES OF THE LRIT SYSTEM (Version 3)

1 General provisions

1.1 Scope, testing requirements and limitations

1.1.1 Scope

1.1.1.1 The intent of this document is to provide protocols for the prototype, developmental, integration, and modification testing phases of the Long-range identification and tracking (LRIT) system.

1.1.1.2 This document describes the methodology for testing the LRIT system and its components, namely the International LRIT Data Exchange (IDE), LRIT Data Distribution Plan (DDP) server and the LRIT Data Centres (DCs), which is defined as validation and verification of data communications and functionality between various components of the LRIT system and the correct sending and receiving of the LRIT messages.

1.1.2 Testing requirements

1.1.2.1 The present protocols and arrangements have been designed to address the requirements set out in:

.1 Regulation[1] V/19-1;

.2 Revised performance standards and functional requirements for the long-range identification and tracking of ships[2] (Performance standards);

.3 Technical specifications for communications within the LRIT system[3];

.4 Technical specifications for the International LRIT Data Exchange[3];

.5 Technical specifications for the LRIT Data Distribution Plan[3];

.6 Technical specifications for the International LRIT Data Centre[3,4]; and

.7 XML schemas[3].

---

1 Unless expressly provided otherwise *Regulation* means a regulation of the International Convention for the Safety of Life at Sea, 1974, as amended.

2 As adopted by resolution MSC.263(84).

3 Refer to MSC.1/Circ.1259/Rev.4 on Long-range identification and tracking system – Technical documentation (Part I).

4 The related technical specifications as set out in MSC.1/Circ.1259/Rev.4 are subject to review and updating by the Maritime Safety Committee and the related work would only be undertaken if an International LRIT Data Centre is to be established.

1.1.2.2 The appendices to this document set out the detailed individual tests which should be carried out. Each such test identifies the relevant provisions of the requirements identified in paragraph 1.1.2.1.

1.1.2.3 The detailed individual tests when conducted should conform to the processes and procedures set out in this document and the appendices.

1.1.2.4 Once completed, the testing documentation should be submitted, for each testing phase as described in the process and procedures section of this document.

1.1.3 Limitations of the testing process

1.1.3.1 The provisions of regulation V/19-1 and the Performance standards, as far as all the components of the LRIT system are concerned, and the provisions of the technical specifications for the LRIT system (refer to paragraphs 1.1.2.1.3 to 1.1.2.1.7 above) as far as the IDE, the International LRIT Data Centre, the DDP and the DDP server are concerned, include a number of requirements which cannot be verified through testing.

1.1.3.2 As the current arrangements envisaged by the Maritime Safety Committee (Committee) in relation to the establishment of the LRIT system do not provide for any form of physical inspections on location it is the responsibility of those establishing DCs, the IDE, the DDP and the DDP server to verify and document their compliance with the related requirements and to produce such documentation when requested to do so by the Committee.

1.1.3.3 The tests envisaged in the present document assume that those establishing DCs, the IDE, the DDP and the DDP server have completed the process of verifying and documenting such compliance prior to entering the prototype, developmental, integration or modification testing phase, as the case may be.

2 Testing protocols

2.1 Overview

2.1.1 General

2.1.1.1 The testing protocols for the LRIT system are critical to ensure a successful system and in order for it to become and remain operational.

2.1.1.2 The prototype phase establishes the prototype environment and the connection of the LRIT system prototype components. After the prototype phase, a test environment and the production environment would be established and open for new DCs to begin testing, beginning with developmental testing within the testing environment and graduating to integration testing in the production environment. The modification testing phase, which also includes a testing environment and the production environment, provides for testing of changes in the LRIT system on or after 00:01 UTC on 31 December 2008 following the adoption of amendments to the requirements referred to in paragraph 1.1.2.1, other than amendments to those referred to in paragraphs 1.1.2.1.3 to 1.1.2.1.7 which may be found necessary during the initial setting up of the system.

2.1.1.3 During the initial setting up and testing of the LRIT system, which on the basis of the available information is expected to continue after 31 December 2008, it may become necessary to conduct additional tests as a result of the adoption of amendments to the technical specifications for the LRIT system referred to in paragraphs 1.1.2.1.3 to 1.1.2.1.7. Such additional tests may entail consequential amendments to the test procedures and test cases set

out in the appendices 2 to 4 of the annex or the adoption of additional test procedures and test cases. The related additional tests will be determined at the time of the adoption of the related amendments to the aforesaid technical specifications, together with the technical and administrative requirements and arrangements to be followed for conducting such tests, as well as the extent to which components of the system which have already completed or are undertaking testing should be retested.

2.1.2 Testing phases

2.1.2.1 There are four distinct testing phases as follows:

.1 ***Prototype testing phase*** *– 1 July 2008 to the date of completion of the testing of the prototype IDE, the prototype DDP and DDP server and a satisfactory number of prototype DCs, subject to the decisions of the Committee*

This is the first step in the establishment of the LRIT system and during this phase the prototype IDE, the prototype DDP and DDP server and a number of prototype DCs would undergo communications and functional tests with a view to verifying that they meet the relevant requirements of regulation V/19-1, of the Performance standards and of the technical specifications for the LRIT system.

In addition, the purpose of this phase is to ascertain whether there is a need to amend in any way any of the technical specifications for the LRIT system.

The DCs that satisfactorily completed all communications and functional tests during the prototype testing phase would form, together with the prototype IDE and the prototype DDP and DDP server, the production environment and are not required to undergo or satisfactorily complete any tests during either the developmental or the integration testing phases. In addition, the aforesaid DCs would form the first testing environment.

The results of the prototype testing phase will be reported to and reviewed by the Committee, at its eighty-fifth session. The end date of this phase will be prior to 31 December 2008 and will be determined by the aforesaid session of the Committee;

.2 ***Developmental testing phase*** *– date of establishment of the testing environment*[5] *to the date to be decided by the Committee*

The purpose of this phase is to enable prototype DCs which have either not been able to satisfactorily complete all communications and functional tests during the prototype testing phase or other DCs that are ready for testing after the formation of the prototype environment to become, through the integration testing phase, part of the production environment during the initial setting up of the LRIT system. As a result, with the exception of the prototype DCs that satisfactorily completed all communications and functionality tests during the prototype testing phase, all DCs should first participate in the developmental testing phase in order to determine

[5] Subject to the DCs completing prototype testing and being available to assist the testing of DCs which have not participated in the prototype testing phase.

whether they should be accepted to participate in the integration testing phase which would in turn determine whether they should be accepted to become part of the production environment.

DCs which satisfactorily complete all communications and functional tests during the developmental testing phase may be required to participate in the testing environment to enable the testing of other DCs during the developmental testing phase.

On the basis of the available information the establishment of DCs during the initial setting up of the LRIT system is expected to continue after 31 December 2008. As a result the Committee, at its eighty-fifth session, will determine the date by which all DCs to be established during the initial setting of the LRIT system should satisfactorily complete all required tests and thus determine the end date of the developmental testing phase;

.3 ***Integration testing phase*** *– Date of completion of the prototype testing phase to the date to be decided by the Committee*

The purpose of this phase is to enable DCs which have satisfactorily completed the developmental testing phase to become part of the production environment during the initial setting up of the LRIT system.

As a result, DCs that have satisfactorily completed developmental testing should then participate in the integration testing phase in order to determine whether they should be accepted to become part of the production environment.

The DCs that participated in the prototype testing and have satisfactorily completed all functional and communications tests during the prototype testing phase would form the production environment and are not required to participate in and satisfactorily complete the integration testing phase.

DCs which satisfactorily complete all communications and functional tests during the integration testing phase may be required to participate in the testing environment to enable the testing of other DCs during the developmental or integration testing phases.

On the basis of the available information, the establishment of DCs during the initial setting up of the LRIT system is expected to continue after 31 December 2008. As a result the Committee, at its eighty-fifth session, will determine the date by which all DCs to be established during the initial setting of the LRIT system should satisfactorily complete all required tests and thus determine the end date of the integration testing phase; and

.4 ***Modification testing phase*** *– 31 December 2008 through life of system*

The purpose of this phase is to enable the testing of modifications to the production environment on or after 31 December 2008 as a result of amendments to provisions of regulation V/19-1, the Performance standards, or the technical specifications of the LRIT system. The specific tests to be conducted in each case and which LRIT system components

should undergo such tests would be determined in line with the requirements of the amendments to be adopted.

The modification testing phase includes a testing environment and the production environment.

2.1.3 Environments used for testing

2.1.3.1 There are three types of environments used for testing as follows:

.1 ***Prototype environment*** – the prototype environment is the LRIT system used during the prototype phase. This environment is established by the prototype IDE, the prototype DDP and DDP server and a minimum of two prototype DCs;

.2 ***Testing environment*** – the testing environment is the LRIT system used during the developmental testing and modification testing phases. This environment is established by the test IDE, test DDP and DDP server and a minimum of two test DCs which has satisfactorily completed all functional and communications tests during either the prototype or developmental testing phases. A DC wishing to become part of the production environment (other than a prototype DC which has satisfactorily completed all communications and functional tests) should first complete developmental testing within the testing environment; and

.3 ***Production environment*** – the production environment is the LRIT system used for operation of the LRIT system, including during the modification testing phase. This environment is initially established by the prototype IDE, prototype DDP and DDP server and prototype DCs that have satisfactorily completed all communications and functional tests. This environment is also the environment within which DCs (other than the prototype ones referred to above) that have undergone and satisfactorily completed the developmental testing phase, once accepted, would undergo the integration testing phase and once accepted, conduct final LRIT system operations.

2.1.3.2 The individual tests to be undertaken in each of the testing environments by each of the components of the LRIT system are identified under the column headed environment in the tests descriptions in the appendices to the annex.

2.1.4 Test types

2.1.4.1 There are two types of tests as follows:

.1 ***Communications test*** – this is a suite of tests (identified with the letter C under the column headed test type in the tests descriptions in the appendices to the annex) that each of the components under test should undergo and satisfactorily complete in order to demonstrate that the component has correctly implemented the Technical specifications for communications within the LRIT system and the various related requirements of the Performance standards. Functionality of the various components would not be tested during this type of test, only their compliance with the aforesaid requirements would be tested; and

.2 ***Functional test*** – this is a suite of tests (identified with the letter F under the column headed test type in the tests descriptions in the appendices to the annex) that each of the components of the LRIT system under test should undergo and satisfactorily complete in order to demonstrate that it meets the requirements of regulation V/19-1 and performs the relevant functionality requirements of the Performance standards, excluding those covered by communications tests, to the extent the said requirements can be demonstrated through testing.

Notwithstanding the aforesaid, the IDE and the DDP and DDP server during this test should, in addition, also demonstrate that they perform all the functionality requirements of the Technical specifications for the International LRIT Data Exchange and Technical specifications for the LRIT Data Distribution Plan respectively, to the extent the said requirements can be demonstrated through testing.

2.1.5 Tests and test certification

2.1.5.1 There are two groups of tests as follows:

.1 ***Pre-tests*** – Tests conducted by components of the LRIT system before entering into the prototype, testing, or production environments. These tests (identified under the column headed required before entering in the tests cases in the appendices to the annex) are conducted by each of the components of the LRIT system to ensure a smooth transition into the related environment; and

.2 ***Environment tests*** – These tests (identified under the column headed required during in the tests descriptions in the appendices to the annex) are conducted after an LRIT component has entered the prototype, testing, or production environment.

2.1.5.2 There are two types of test certifications as follows:

.1 ***Internal test certification*** – These are either pre-tests or environment tests (identified as internal under the column headed certification in the tests descriptions in the appendices to the annex) that are self-certified as pass/fail by the LRIT component undergoing the test and in the case of prototype testing by one or more components of the LRIT system forming the prototype environment; and

.2 ***External test certification*** – These are either pre-tests or environment tests (identified as external under the column headed certification in the tests descriptions in the appendices to the annex) that are certified as pass/fail by the LRIT component undergoing testing and one or more components of the LRIT system forming the prototype, testing, or production environment.

3 Process and procedures

3.1 General

3.1.1 Overview

3.1.1.1 Before undertaking any tests during the various testing phases, those concerned with the components of the LRIT system to be tested and those concerned with the components of the LRIT system participating in the testing should first meet the technical and administrative requirements of the arrangements specified below.

3.1.1.2 Each phase of testing also requires the accurate documentation of the results of the communications and functional tests which should be prepared by those concerned with the components of the LRIT system to be tested and those concerned with the components of the LRIT system participating in the testing in accordance with the arrangements specified below.

3.2 Prototype testing phase arrangements and procedures

3.2.1 Overview

3.2.1.1 The prototype testing environment should consist of the prototype IDE, the prototype DDP and DDP server and a number of prototype DCs (at least two) for which the Contracting Governments have notified, pursuant to the provisions of the Performance standards, the Organization as to their establishment and existence indicating their wish and readiness to participate in the prototype testing phase. Only DCs established by Contracting Governments that have provided all the required information to the DDP should be allowed to participate in the prototype testing phase.

3.2.1.2 The prototype testing phase is critical for the successful implementation of the LRIT system. In order to ensure the timely establishment of the LRIT system it is necessary to provide, as soon as possible, *inter alia*:

.1 certainty in relation to the adequacy and completeness of the Technical specifications for communications within the LRIT system; and

.2 a testing environment to enable those engaged in the establishment of DCs to test their functionality in particular the satisfactory operation of the geo-spatial elements.

3.2.1.3 At the time of adoption of this version of the present protocols it was recognized that a number of DCs participating in the prototype testing phase might not be able to engage or conduct a number of functional tests for example due to their geo-spatial elements still being under construction.

3.2.1.4 As a result, each DC participating in the prototype testing phase should undertake and satisfactorily complete first all communications tests. The scheduling of the various functional tests should be determined through a mutual agreement with the components of the LRIT system which would be participating in the relevant tests.

3.2.1.5 In case a DC participating in the prototype testing phase is unable to satisfactorily complete all functional tests by the date which the Committee will determine as the end date of the prototype testing phase, that DC should be treated as a DC which has not undergone any testing and should commence testing anew through the developmental and integration testing phase route.

3.2.2 Pre-prototype testing arrangements *(At time of the adoption of this version of the present protocols a number of aspects set out in paragraph 3.2.2.1 have been overtaken by events. However, in the context of providing a record of the actions taken during the prototype testing phase these have been retained in the form they were adopted by the Ad Hoc LRIT Group at its fifth session.)*

3.2.2.1 The pre-prototype testing process is as follows:

.1 DCs participating in the prototype testing phase are those which have notified[6] by 11 July 2008 the Organization to this end indicating that they are ready for testing and are prepared to connect to the prototype environment;

.2 DCs participating in the prototype testing phase should, if they have not already done so, communicate to the Organization, no later than 15 September 2008, the name and contact details (office and postal address, office and mobile telephone number, facsimile number and e-mail address) of an official or officer charged with coordinating all matters relating to the tests to be conducted;

.3 The Contracting Government(s) establishing the prototype DCs should, if they have not already done so, provide, no later than 15 September 2008, all the required information to the DDP and the Secretariat should advise to this end those forming the prototype environment that the required information have been received and thus confirm that the prototype testing should continue;

.4 All prototype components should, if they have not already done so, request, no later than 1 September 2008, from the United States, acting in the capacity of the operator of the IDE, the issue of a PKI certificate which they should install and use during testing taking into account any related instructions and guidance provided by the United States and subject to any conditions attached thereto;

.5 Each of the prototype components should undertake and complete, after implementing the revised XML schemas set out in annex 5 to document MSC 85/6/1/Add.1, the Pre-tests specified in the related appendices of the annex for the prototype environment and forward its respective completed documentation to the Organization if they have not already done so not later than 15 September 2008 or at least five working days prior to the date they will agree to commence prototype testing, whichever of the two dates is later;

.6 The Secretariat should provide those forming the prototype environment with copies of the Pre-tests documentation as soon as it receives it;

.7 Those forming the prototype environment should, no later than three working days after receiving the Pre-tests documentation, advise the Organization whether they are comfortable with the results of the Pre-tests and confirm that they are ready to proceed with the prototype testing;

[6] As of 11 July 2008, the following Contracting Governments establishing National LRIT Data Centres have notified the Organization of their wish to participate in the prototype testing phase: the Bahamas, Brazil, Canada, Liberia, the Marshall Islands, the Republic of Korea and the United States.

.8 The United States, acting in its capacity as the operator of the IDE, and in consultation with the DDP server and the DCs forming the prototype environment, should determine and advise the date and times on which each DC would commence prototype testing and advise those concerned of the date by which the prototype tests should be preferably completed; and

.9 The prototype DDP server and the prototype DCs should request the connection to the IDE and the DDP server (in the case of DCs) and coordinate a testing schedule with the components forming the prototype environment. The IDE and DDP server should have a leading and coordinating role in scheduling the tests to be conducted and the DC undergoing prototype testing should conduct the tests they identify in the order they determine these.

3.2.3 Prototype testing process *(At time of the adoption of this version of the present protocols a number of aspects set out in paragraph 3.2.3.1 have been overtaken by events. However, in the context of providing a record of the actions taken during the prototype testing phase these have been retained in the form they were adopted by the Ad Hoc LRIT Group at its fifth session.)*

3.2.3.1 The prototype testing process is subject to the implementation of the revised XML schemas set out in annex 5 to document MSC 85/6/1/Add.1 and is as follows:

.1 The prototype components should satisfactorily complete all communications and functional tests subject to the additional provisions specified in the procedures and arrangements set out in annex 3 to document MSC 85/6/1/Add.1;

.2 All components participating in the testing should document the results of the testing at their end, so as to be able to examine the results of the tests as documented by the components undergoing or involved in the testing;

.3 All components participating in the testing should forward the complete testing documentation after the end of the communications and functional tests, as the case may be, to the Organization no later than two working days after the end of the testing together with the associated summary report;

.4 The Secretariat should provide those forming the prototype environment with copies of the testing documentation and of the summary reports as soon as it receives it;

.5 All components participating in the testing should, no later than two working days after receiving the testing documentation and the summary report, advise the Organization whether they are satisfied with the results of testing as documented by the other components which have undergone or participated in the testing and confirm that they certify these as true and correct by completing the relevant section of the related summary report and returning it to the Organization; and

.6 The Secretariat should prepare at the end of the prototype testing phase a draft report for the consideration by MSC 85 and should forward it to all the components that participated in the prototype testing phase for their

perusal and comments. Any comments should be forwarded to the Secretariat no later than two working days after receiving the draft report. In the absence of any response, the Secretariat should assume that the component(s) which did not respond have no comments and are satisfied with the draft report being finalized and submitted for consideration by MSC 85. In case of comments or proposed amendments, the Secretariat should act accordingly with a view to reaching consensus amongst all parties and ensuring that the report is submitted for consideration by MSC 85 in a timely manner.

3.2.3.2 The prototype IDE and DDP server should endeavour to complete all communications and functional tests in which they are involved before commencing any tests which involve a DC.

3.2.4 Post-prototype testing process *(At time of the adoption of this version of the present protocols a number of aspects set out in paragraph 3.2.4.1 have been overtaken by events. However, in the context of providing a record of the actions taken during the prototype testing phase these have been retained in the form they were adopted by the Ad Hoc LRIT Group at its fifth session.)*

3.2.4.1 The post-prototype testing arrangements to be observed are as follows:

.1 The components participating in the prototype testing phase should identify and submit for consideration by the *Ad Hoc* LRIT Working Group, at its sixth session, any final amendments to the technical specifications for the LRIT system including the necessary modifications to the present protocols and the XML schemas;

.2 The prototype components (i.e. IDE, DDP server and voluntary DCs[7]) should establish the testing environment not later than 1 October 2008 and should advise to this end the Organization as soon as the testing environment is ready to engage in the developmental testing phase; and

.3 The prototype components (i.e. IDE, DDP server and voluntary DCs) should establish a production environment no later than 1 October 2008 and should advise the Organization to this end as soon as the testing environment is ready to engage in the integration testing phase.

3.2.5 Continuation and completion of the prototype testing process *(This part has been adopted in order to provide the framework for the continuation and completion of the prototype testing phase as the result of adoption by the Ad Hoc LRIT Group, at its sixth session, of amendments to the technical specifications for the LRIT system, the XML schemas and the test procedures and test cases.)*

3.2.5.1 The IDE, DDP server and all DCs participating in the prototype testing should before continuing any further testing:

.1 implement the revised XML schemas set out in annex 5 to document MSC 85/6/1/Add.4;

[7] Refer to the procedures and arrangements set out in annex 3 to document MSC 85/6/1/Add.3.

.2 implement any required changes to their systems as results of the amendments to the technical specifications for the LRIT system adopted by the *Ad Hoc* LRIT Group, at its sixth session, as set out in annex 5 to document MSC 85/6/1/Add.4; and

.3 confirm to the other components of the LRIT system participating in the prototype testing phase that they have taken all required actions in line with subparagraphs .1 and .2 above, satisfactorily completed all necessary self-testing and are ready to continue the testing process.

3.2.5.2 The IDE, DDP server and all DCs participating in the prototype testing should:

.1 undertake and satisfactorily complete all test procedures and test cases specified in the relevant appendices of the annex which have not yet conducted. This should include all test procedures and test cases for which they have not reported the test results to the Organization and all new test procedures and test cases adopted by the *Ad Hoc* LRIT Group, at its sixth session; and

.2 repeat and satisfactorily complete all test procedures and test cases which have been amended by the *Ad Hoc* LRIT Group, at its sixth session.

3.2.5.3 The IDE, DDP server and all DCs participating in the prototype testing should forward the complete testing documentation together with the associated summary report to the Organization by 14 November 2008 **at the latest**.

3.2.5.3.1 The testing documentation for all DCs participating in the prototype testing is set out in appendix 2 of the annex, for the IDE in appendix 3 of the annex and for DDP server in appendix 4 of the annex. The summary report, for all DCs, is set out in appendix 5 of the annex. These may be obtained from the Secretariat in word format upon request. When completing the testing documentation the existing text should not be amended in any way and the entries should be limited to include a Pass or a Fail under the column headed Pass/Fail. Any related information should be provided on separate sheets by cross referencing the test procedure and/or case to which these relate.

3.2.5.4 The Secretariat should provide those forming the prototype environment with copies of the testing documentation and the summary reports as soon as it receives them.

3.2.5.5 All components participating in the testing should, no later than one working day after receiving the testing documentation and the summary report, advise the Organization whether they are satisfied with the results of testing as documented by the other components which have undergone or participated in the testing and confirm that they certify these as true and correct by completing the relevant section of the related summary report and returning it to the Organization.

3.2.5.6 The Secretariat should prepare by 19 November 2008 a draft report on the results of the prototype testing phase for the consideration by the Committee, at its eighty-fifth session, and should forward it to all the components that participated in the prototype testing phase for their perusal and comments. Any comments should be forwarded to the Secretariat no later than 20 November 2008. In the absence of any response, the Secretariat should assume that the component(s) which did not respond have no comments and are satisfied with the draft report being finalized and submitted for consideration by the Committee. In case of comments or proposed amendments, the Secretariat should act accordingly with a view to reaching consensus amongst all parties and ensuring that the report is submitted for consideration by Committee in a timely manner.

3.3 Developmental testing phase arrangements and procedures

3.3.1 Overview

3.3.1.1 Developmental testing is conducted in the testing environment which would be established after the successful prototype testing of the prototype IDE, DDP server, and at least two prototype DCs. Developmental testing should always include one DC that has satisfactorily completed all communications and functional tests during either the prototype or developmental phase. However, a DC which has satisfactorily completed developmental testing but has failed to complete integration testing should not form part of the testing environment.

3.3.1.2 The Organization would notify all Contracting Governments when the testing environment is ready and available for developmental testing. DCs wishing to undergo developmental testing would be accommodated on a first come, first served basis.

3.3.2 Pre-developmental testing process

3.3.2.1 The pre-developmental testing arrangements to be observed are as follows:

.1 The Contracting Government(s) establishing the DC wishing to undergo development testing should notify to this end the Organization;

.2 The Contracting Government(s) concerned should provide all the required information to the DDP no later than three working days prior to the commencement of the developmental testing and the Secretariat should advise to this end those forming the testing environment. As far as the polygons of the geographical areas which should be included in the DDP, the Contracting Government should ensure that these fully comply with the constrains provided in section 5 of the Technical specifications of the LRIT Data Distribution Plan;

.3 The DC should, after ensuring that it has implemented the release version of the XML schemas in force, undertake and satisfactorily complete the Pre-tests specified in the appendix 2 of the annex which are relevant to DCs for the testing environment and should forward the completed pre-test documentation to the Organization, together with a confirmation that it has implemented the aforesaid schemas;

.4 The DC should ascertain that the polygons of the geographical areas which should be included by the Contracting Government in the DDP fully comply with the constrains provided in section 5 of the Technical specifications of the LRIT Data Distribution Plan; should implement and test the polygons; and confirm that it has done so and that these have not caused any errors or malfunctions to the Organization when submitting the Pre-test documentation. In case of errors or malfunctions, it should advise the Contracting Government concerned to make the required changes in the DDP before forwarding the completed pre-test documentation to the Organization;

.5 The Secretariat should provide those forming the testing environment with copies of the Pre-tests documentation together with the confirmations specified in subparagraphs .3 and .4 as soon as it receives it;

.6 Those forming the testing environment should, no later than three working days after receiving the Pre-tests documentation, advise the Organization whether they are comfortable with the results of the Pre-tests and confirm that they are ready to proceed with the developmental testing;

.7 The Secretariat in consultation with the components forming the testing environment and the DC requesting developmental testing should determine and advise the date and times on which the developmental testing would commence and advise those concerned of the date by which the tests should be preferably completed; and

.8 The Secretariat should also provide to the LRIT Coordinator salient information concerning that DC.

3.3.3 Developmental testing process

3.3.3.1 The development testing process to be observed is as follows:

.1 DC, as soon as is advised of the date and times on which the developmental testing would commence, should request from the Secretariat, the issue of a PKI certificate and should confirm to those forming the testing environment that it has installed it. The Secretariat should not issue such a PKI certificate unless the information which should be communicated to the Organization have been received and/or entered in the DDP and the pre-testing documentation has been circulated to the interested parties and they have confirmed their readiness to commence testing;

.2 DC should request the connection to the IDE and the DDP server and coordinate a testing schedule with the components forming the testing environment. The IDE and DDP server should have a leading and coordinating role in scheduling the tests to be conducted and the DC undergoing developmental testing should conduct the tests they identify in the order they determine these;

.3 DC should undergo and satisfactorily complete the communications and functional tests specified in appendix 2 of the annex for the testing environment;

.4 The DC which has undergone testing should complete and forward its testing documentation and the related summary report to the Organization and to the LRIT Coordinator no later than two working days after the end of the developmental testing. The testing documentation is set out in appendix 2 of the annex and the summary report is set out in appendix 5 of the annex. These may be obtained from the Secretariat in word format upon request. When completing the testing documentation the existing text should not be amended in any way and the entries should be limited to include a Pass or a Fail under the column headed Pass/Fail. Any related information should be provided on separate sheets by cross referencing the test procedure and/or case to which these relate;

.5 All other components of the LRIT system participating in the testing should also document the results of the testing at their end, so as to be able to examine the results of the tests as documented by the DC undergoing testing;

.6 The Secretariat should provide those participating in the testing environment with copies of the testing documentation and of the related summary report as soon as it receives it;

.7 Those forming the testing environment should, no later than two working days after receiving the testing documentation and the related summary report, advise the Organization and the LRIT Coordinator whether they are satisfied with the results of developmental testing as documented by the DC which has undergone developmental testing and confirm that they certify these as true and correct by completing the relevant section of the related summary report and returning it to the Organization and forwarding a copy of it to the LRIT Coordinator;

.8 The LRIT Coordinator, after examining the testing documentation and the related summary report, if it is satisfied, should authorize, as instruct by MSC 84, the integration of the DC which has satisfactorily completed developmental testing and should advise the Organization to this end. The LRIT Coordinator, if unable to authorize the integration of the DC which has undergone developmental testing into the production environment should communicate its decision to the DC concerned and the Organization together with the reasons thereof;

.9 The Secretariat should communicate the decisions of the LRIT Coordinator to those who have formed the testing environment; and

.10 If the LRIT Coordinator has authorized the integration of the DC into the production environment, the Secretariat should inform accordingly those forming the production environment.

3.4 Integration testing phase arrangements and procedures

3.4.1 Overview

3.4.1.1 Integration testing is conducted in the production environment which would be established after the successful prototype testing of the prototype IDE, DDP server, and at least two prototype DCs. Integration testing should always include two DCs that are forming part of the production environment.

3.4.1.2 The Organization should notify all Contracting Governments when the production environment is ready and available for integration testing. DCs wishing to undergo integration testing should be accommodated on a first come, first served basis.

3.4.2 Integration testing process

3.4.2.1 The integration testing process to be observed is as follows:

.1 DC should request the connection to the IDE and the DDP server and coordinate a testing schedule with the components forming part of the production environment which would participate in the integration testing. The IDE and DDP server should have a leading and coordinating role in scheduling the tests to be conducted and the DC undergoing integration testing should conduct the tests they identify in the order they determine these;

.2 DC should undergo and satisfactorily complete the communications and functional tests specified in appendix 2 of the annex for integration into the production environment;

.3 The DC which has undergone testing should complete and forward its integration testing documentation and the related summary report to the Organization and the LRIT Coordinator no later than two working days after the end of the integration testing. The testing documentation is set out in appendix 2 of the annex and the summary report is set out in appendix 5 of the annex. These may be obtained from the Secretariat in word format upon request. When completing the testing documentation, the existing text should not be amended in any way and the entries should be limited to include a Pass or a Fail under the column headed Pass/Fail. Any related information should be provided on separate sheets by cross referencing the test procedure and/or case to which these relate;

.4 All other components participating in the integration testing should also document the results of the testing at their end, so as to be able to examine the results of the tests as documented by the DC undergoing testing;

.5 The Secretariat should provide to those participating in the integration testing with copies of the integration testing documentation and the related summary report as soon as it receives it;

.6 Those participating in the integration testing should, no later than two working days after receiving the integration documentation and the related summary report, advise the Organization and the LRIT Coordinator whether they are satisfied with the results of integration testing as documented by the DC which has undergone integration testing and confirm that they certify these as true and correct by completing the relevant section of the related summary report and returning it to the Organization and forwarding a copy of it to the LRIT Coordinator; and

.7 If the DC being tested fails the integration testing, the Secretariat should, as soon as the Organization has been notified to this end, inform accordingly those operating in the production environment and those who participated in the developmental testing of the DC in question.

3.4.2.2 In case a DC undergoing testing during the integration testing phase fails to satisfactorily complete all required tests, that DC should be treated as a DC which has not undergone any testing and should commence testing anew through the developmental and integration testing phase route.

3.5 Modification testing phase

3.5.1 Overview

3.5.1.1 Modification testing is conducted in the testing environment and, if necessary, in the production environment. Modification testing should be conducted whenever new test procedures and test cases are required to be conducted as a result of amendments to the provisions of regulation V/19-1, the Revised performance standards or the Technical specifications for the LRIT system, or any related decision of the Maritime Safety Committee.

3.5.1.2 The detailed modification test procedures and test cases, as well as any decisions or additional guidance, will be prepared and approved by either the Committee or the LRIT operational governance body, as defined within the Continuity of Service Plan for the LRIT System, on a case by case basis taking into consideration the impact and urgency of the modification.

3.5.2 Pre-modification testing process

3.5.2.1 The Secretariat should notify all LRIT system components (IDE, DDP server and DCs) operating in the production environment of the LRIT system and the LRIT Coordinator, about any decision (schedule, deadlines, etc)relating to the implementation of amendments to the provisions of regulation V/19-1, the Revised performance standards or the Technical specifications for the LRIT system, or any decision of the Maritime Safety Committee, which may require additional testing to be conducted in the testing and the production environments of the LRIT system.

3.5.2.1.1 The Secretariat should provide those LRIT system components required to undergo modification testing with a bespoken version of the Summary report and the Report of test results, including the required test procedures and test cases, as well as any particular instructions to be observed.

3.5.2.2 In case a new version of the XML schemas needs to be implemented, the corresponding release version should be available for download in the testing environment of the DDP.

3.5.3 Modification testing process

3.5.3.1 The LRIT system component concerned should undergo and satisfactorily complete the communications and functional tests specified in the Secretariat's notification for the testing environment.

3.5.3.2 As soon as the testing is completed, the LRIT system component that has undergone testing in the testing environment should complete the Summary report and the Report of test results and forward these to the Organization.

3.5.3.2.1 When completing the testing documentation, the existing text should not be amended in any way as this may invalidate the whole testing process.

3.5.3.2.2 The entries in the Report of test result should be limited to either include a Pass or a Fail under the column headed Pass/Fail.

3.5.3.2.3 The LRIT system component should only complete the relevant part of the Summary report which is required to be completed by the LRIT system component undergoing testing. Other relevant parts of the Summary report which may require external certification, if any, will be forwarded by the Secretariat to those LRIT system components, which have assisted the testing, for its completion.

3.5.3.3 The Secretariat should provide those system components which have assisted the testing with copies of the Report of test results and of the related Summary report as soon as it receives them.

3.5.3.4 Those assisting the testing should, no later than two working days after receiving the testing documentation, advise the Organization whether they are satisfied with the results of the testing as documented by the LRIT system component which has undergone testing and confirm

that they certify these as true and correct by completing the relevant parts of the related Summary report and returning it to the Organization.

3.5.3.5 Having received the relevant parts of the Summary report from those which were required to externally certify the test cases, if any, the Secretariat will forward the complete Summary report and Report of test results to the LRIT Coordinator for information.

3.5.3.6 In case an LRIT system component undergoing testing in the testing environment fails to satisfactorily complete all required tests, that system component should be treated as a system component which has not undergone any testing and should commence testing anew through the modification testing phase route.

3.5.4 Implementation in the Production environment

3.5.4.1 Depending on the scope of the modification to the LRIT system, the modification can either be made by the required system component(s) all at the same time or in stages. The preferred implementation approach will be based on the specifics of the modification concerned. Either the Committee or the LRIT Operational Governance body, defined within the Continuity of Service Plan for the LRIT system, will decide the preferred, or required, implementation approach.

3.5.4.1.1 For modifications that must be implemented at the same time, it is anticipated that all of the LRIT system components will have successfully completed their testing well before the planed cut over date. If problems occur during the cut over, operational decisions will be made as defined within the Continuity of Service Plan for the LRIT system to ensure the continued operation of the system.

3.5.4.1.1.1 If all system components have not successfully completed testing prior to the planned cut over, the LRIT Operational Governance body will decide whether or not to continue the cut over. The decision will be based on the desire to maintain the LRIT system in operation with the maximum number of LRIT system components on line and capable of exchanging LRIT information.

3.5.4.1.2 For modifications that can be implemented in stages, the cut over will occur within the time period defined by the guidance prepared for the modification. As each system component completes the modification testing it will be re-integrated into the production system in a coordinated manner.

3.5.4.1.2.1 LRIT system components, which have satisfactorily completed all required tests in the testing environment should implement the modification in the production environment within the time period defined by the guidance prepared for the modification. The time period could be extended by the Secretariat depending on the magnitude of the test required to be conducted.

3.5.4.2 In case there were no additional test procedures and test cases required to be conducted and having implementing the necessary system modifications in the production environment, the LRIT system component concerned should notify the Organization and the LRIT Coordinator once the required system modifications were satisfactory implemented. Having received this notification, the modification testing phase would be considered as complete for that system component.

3.5.4.3 In case there are test procedures and test cases required to be conducted in the production environment, the Secretariat should provide those required to undergo testing with a bespoke version of the Summary report and Report of test results, including the required test procedures and test cases, as well as any particular instructions to be observed. In this case, the following procedures should be observed:

.1 As soon as the testing is completed, the LRIT system component which has undergone testing in the production environment should complete and forward its Summary report and Report of test results to the Organization.

.1 When completing the testing documentation, the existing text should not be amended in any way as this may invalidate the whole testing process.

.2 The entries in the Report of test results should be limited either to include a Pass or a Fail under the column headed Pass/Fail.

.3 LRIT system components should only complete the relevant part of the Summary report which is required to be completed by the DC undergoing testing. Other relevant parts of the Summary report which may require external certification, if any, will be forwarded by the Secretariat to those system components, which have assisted the testing, for its completion.

.2 The Secretariat should provide those participating in the testing process with copies of the Report of test results and of the related Summary report as soon as it receives them.

.3 Those assisting the testing should, no later than two working days after receiving the testing documentation, advise the Organization whether they are satisfied with the results of the testing as documented by the LRIT system component which has undergone testing in the production environment and confirm that they certify these as true and correct by completing the relevant parts of the related Summary report and returning it to the Organization.

.4 Having received the relevant parts of the Summary report from those which were required to externally certify the test cases, if any, the Secretariat will forward the complete Summary report and Report of test results to the LRIT Coordinator.

.5 If the LRIT system component fails to satisfactorily complete all required tests, that system component should be treated as a system component which has not undergone any testing and should commence testing anew through the modification testing phase route. In this case, the Secretariat should, as soon as the Organization has been notified, inform accordingly those operating in the production environment and those who participated in the modification testing of the system component in question.

ANNEX

LRIT SYSTEM TESTS

Introduction

1 The LRIT system tests pertaining to the testing of the following components of the LRIT system:

.1 International LRIT Data Exchange;

.2 LRIT Data Centres; and

.3 LRIT Data Distribution Plan and LRIT Data Distribution Plan server.

1.1 The test procedures and test cases for each of the components of the LRIT system are specified in appendices 2 to 4.

LRIT messages

2 The table below provides a summary of all LRIT messages (Message Types 1 to 15) and indicates whether the message is routed between LRIT Data Centres or broadcast to all LRIT Data Centres (i.e. data communication paths required and the associated messages required for LRIT of ships).

Table

Summary of LRIT Messages (1)

Type	Name	Description/Purpose	Tx(2)	Rx(2)	Broadcast
LRIT information (position report) messages					
1	Periodic position report	Regular periodic position reports	DC2	IDE	No
			IDE	DC1	
2	Polled position report	Position report as a result of a poll request	DC2	IDE	No
			IDE	DC1	
3	SAR position report	Position report as a result of a SAR request	DCx	IDE	No
			IDE	DC1	
LRIT request messages					
4	Position request	To enable a DC to request LRIT information for ships being monitored by another DC	DC1	IDE	No
			IDE	DC2	
5	SAR poll request	To enable a DC to request LRIT information, as a SAR user, for ships being monitored by another DC	DC1	IDE	No
			IDE	DC2	

Type	Name	Description/Purpose	Tx(2)	Rx(2)	Broadcast
6	SAR SURPIC request	SAR request for position of ships in a specific area, broadcast via the IDE to all DCs	DC1	IDE	Yes
			IDE	DCx	
Other messages					
7	Receipt	To enable a LRIT component to confirm the processing of a LRIT message	DDP server	DC, IDE	No
			DC2	IDE, DDP server	
			IDE	DC1, DDP server	
8	DDP notification	Notification that a new or an updated version of the DDP file is available	DDP server	IDE	Yes
			IDE	DCx	
9	DDP request	Request for full, incremental or archived version of the DDP from the DDP server	DCx IDE	DDP server	No
10	DDP update	Response to a DDP request with requested versions of the DDP attached	DDP server	DCx IDE	Does not get routed by the IDE
11	System status	To enable the IDE to communicate a status message every 30 min to each DC and the DDP server advising that the system is "healthy" and receive status messages from the DCs and the DDP server	IDE	DCx DDP server	Yes
			DCx DDP server	IDE	
12	Journal	Routine monthly message from a R/CDC or the IDC to the IDE containing its Journal	R/CDC1 and IDC	IDE	No
13	Pricing notification	Notification that a new pricing list for inter-DC charges is in place	IDE	DC	Yes
14	Pricing request	Request for updated pricing list	DC	IDE	No
15	Updated pricing file	Updated pricing list file	DC IDE	IDE DC	No

Note:

(1) Refer to the Technical specifications for communications within the LRIT system for further information.

(2) DC1 = requesting DC; DC2 = providing DC; DCx = all DCs; R/CDC1 = Regional or Cooperative LRIT Data Centre.

List of abbreviations

3 The following abbreviations are used in this document:

REF: the associated regulatory reference using the following abbreviations to indicate the related provision:

R: Regulation V/19-1;

PS: Revised performance standards and functional requirements for the long-range identification and tracking of ships;

TS1: Revised interim technical specifications for the LRIT system – Technical specifications for the International LRIT Data Exchange;

TS2: Revised interim technical specifications for the LRIT system – Technical specifications for the International LRIT Data Centre;

TS3: Revised interim technical specifications for the LRIT system – Technical specifications for communications within the LRIT system;

TS4: Revised interim technical specifications for the LRIT system – Technical specifications for LRIT Data Distribution Plan;

TS5: Criteria for the location of the International LRIT Data Centre and the International LRIT Data Exchange (MSC 83/6/2, annex 2).

For example PS: 7.1.2 indicates paragraph 7.1.2 of the Revised performance standards.

DC: LRIT Data Centre

NDC: National LRIT Data Centre

RDC: Regional LRIT Data Centre

CDC: Co-operative LRIT Data Centre

IDC: International LRIT Data Centre

IDE: International LRIT Data Exchange

DDP: LRIT Data Distribution Plan server

LDU: LRIT Data User

N/A: Not applicable

C: Communications test used in the column headed Test type in the tables of the test cases

F: Functional test used in the column headed Test type in the tables of the test cases

List of appendices

Appendix 1	Communication paths – Generic test diagram
Appendix 2	LRIT Data Centre test procedures and test cases
	Tables 2.1 to 2.16 – Test procedures and test cases
Appendix 2A	LRIT Data Centre test procedures and test cases
	Tables 2-A.1 to 2-A.2 – Test procedures and test cases for the first modification testing
Appendix 3	International LRIT Data Exchange test procedures and test cases
	Tables 3.1 to 3.10 – Test procedures and test cases
Appendix 3A	International LRIT Data Exchange test procedures and test cases
	Tables 3-A.1 to 3-A.2 – Test procedures and test cases for the first modification testing
Appendix 4	LRIT Data Distribution server test procedures and test cases
	Tables 4.1 to 4.5 – Test procedures and test cases
Appendix 5	Summary report (for LRIT Data Centres)
Appendix 6	Explanatory notes and guidance on the conduct of testing of LRIT Data Centres

Appendix 1

COMMUNICATION PATHS

Figure 1 illustrates the communication paths within the LRIT system through a generic test diagram for all test cases listed in this document.

The communication paths are intended to illustrate the flow of LRIT messages between components of the LRIT system. The letters A to J represent the various communication paths within the test environment.

The IDE, DDP server and DC blocks represent either real components of the LRIT system or simulator components. No simulator should be connected to the production environment.

In appendices 2 to 4, where necessary, the communications paths A to N are identified within parenthesis in some instances in the testing procedures and in test cases under the columns headed Case and Expected results.

Figure 1

Generic test diagram

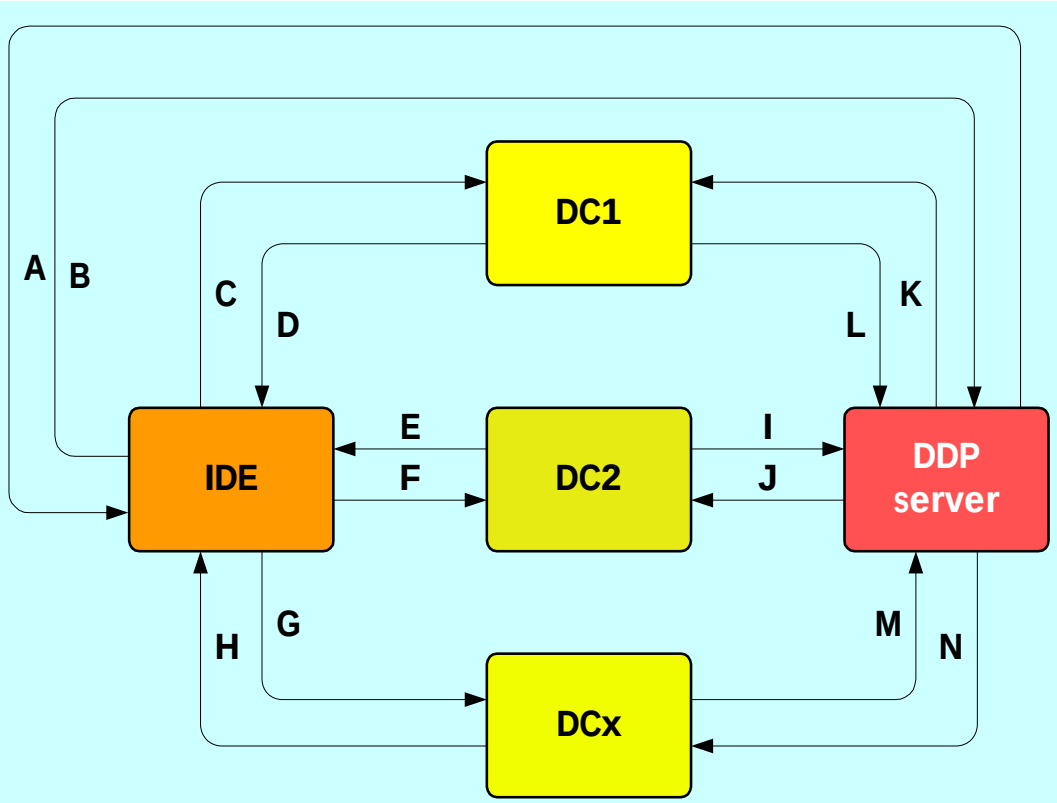

DC1: requesting DC; DC2: providing DC; DCx: all DCs

Appendix 2

LRIT DATA CENTRE TEST PROCEDURES AND CASES

The Pass/Fail column of a particular test case indicates the results of the specific test. A pass entry should be made when the test has been satisfactorily conducted and the results are satisfactory. A fail entry should be made when either the test cannot be conducted or the envisaged test cannot be satisfactorily carried out or the results of the test are not satisfactory.
The Pass/Fail column of a particular test procedure summarizes the results of the associated test cases. A pass entry should be made when all associated test cases have been satisfactorily conducted and their results are satisfactory. A fail entry should be made when the test of anyone of the associated test cases cannot be conducted or the envisaged test cannot be satisfactorily carried out or the results of the test are not satisfactory.

Table 2.1

Test procedure DC-1.0

Test	REF	Test procedure	Pass/Fail
DC-1.0	PS: 7.1.8	DC1 receives a Periodic Position Report (Message Type 1) through IDE (IDE → DC1). Communication paths specified in parentheses for each test case. All parameters associated with each message should be valid unless specified otherwise in a given test case.	

Test cases DC-1.1 to DC.1.6

Test	REF	Case	Expected results	Test type	Environment	Required before entering	Required during	Certification	Pass/Fail
DC-1.1	PS: 7.1.8	DC receives periodic position report from IDE with all valid Message parameters. (C)	Verify reception of message and no further action required by DC. The DC does not need to log or archive the message.	C	Prototype Test Production	Yes Yes N/A	Yes Yes Yes	External External External	

Test	REF	Case	Expected results	Test type	Environment	Required before entering	Required during	Certification	Pass/Fail
DC-1.2	PS: 7.1.8	DC receives a periodic position report that does not pass schema validation. (C)	The DC does not need to log or archive the message. A SOAP Fault or Receipt Message with Receipt code 7 is sent with message text indicating the reason for rejection. (D)	C	Prototype Test Production	No No N/A	Yes Yes No	Internal Internal N/A	
DC-1.3	PS: 7.1.8 TS3: 2.2.2	Message validation with zero data or incomplete data in fields. (C)	The DC does not need to log or archive the message. A SOAP Fault or Receipt Message is sent with message text indicating the reason for rejection. (D)	C	Prototype Test Production	No No N/A	Yes Yes No	Internal Internal N/A	
DC-1.4	PS: 7.1.8 TS3: 2.2.2	The LDU addressee is registered to the DC. (C)	Successfully reception of the message.	C	Prototype Test Production	Yes Yes N/A	Yes Yes Yes	Internal Internal Internal	
DC-1.5	PS: 7.1.8 TS3: 2.2.2	The LDU addressee is not registered to the DC. (C)	The DC does not need to log or archive the message. A Receipt Message with Receipt code 7 is sent with message text indicating the reason for rejection. (D)	C	Prototype Test Production	No No N/A	Yes Yes No	Internal Internal N/A	
DC-1.6	PS: 7.1.8 TS3: 2.2.2	Message with ReferenceId field different of 0 but the Reference doesn't exist in DC. (C)	The DC does not need to log or archive the message. A Receipt Message with Receipt code 7 is sent with message text indicating the reason for rejection. (D)	C	Prototype Test Production	No No N/A	Yes Yes No	Internal Internal N/A	

Table 2.2

Test procedure DC-2.0

Test	REF	Test procedure	Pass/Fail
DC-2.0	PS: 7.1.7 TS3: 2.2.3	DC1 receives a Ship Position Request (Message Type 4 and 5) sent by other LRIT Data Centre (DC2) through IDE (C). Communication paths specified in parentheses for each test case. All parameters associated with each message should be valid unless specified otherwise in a given test case.	

Test cases DC-2.1 to DC-2.9

Test	REF	Case	Expect results	Test type	Environment	Required before entering	Required during	Certification	Pass/Fail
DC-2.1	PS: 7.1.7 TS3: 2.2.3 TS3:2.2.1.4	DC1 receives a position request Message with all valid parameters. Tests should be performed for all test cases as stipulated in Table 2.2.1 and 2.2.2. (C)	DC1 sends the appropriate position report or receipt for each test case to DC2. (D) All timestamps should be in accordance with the provision of TS3	F/C	Prototype Test Production	No Yes N/A	Yes Yes No	External External N/A	
DC-2.2	PS: 7.1.7 TS3: 2.2.3 TS3:2.3.3 TS3:2.3.6	DC1 receives a position request for the same ship from two DCs. One of the DCs request position reports at a rate of 30 min for 3 h while the other DC requests position reports at a rate of 15 min for 2 h. (C)	DC1 sends the first DC position reports at a rate of 30 min for duration of 3 h. The second requesting DC receives position reports at a rate of 15 min for duration of 2 h. (D)	F	Prototype Test Production	No Yes N/A	Yes Yes No	External External N/A	

Test	REF	Case	Expect results	Test type	Environment	Required before entering	Required during	Certification	Pass/Fail
DC-2.3	PS: 7.1.7 TS3: 2.2.3	Message validation with invalid Message parameter. (C)	The DC does not need to log or archive the message. A SOAP Fault or Receipt Message with Receipt code 7 is sent with message text indicating the reason for rejection. (D)	C	Prototype Test Production	No No N/A	Yes Yes No	Internal Internal N/A	
DC-2.4	PS: 7.1.7 TS3: 2.2.3	The requested ship is not registered to the DC. (C)	A Receipt Message with Receipt code 7 is sent with message text indicating the reason for rejection. (D)	F	Prototype Test Production	No Yes N/A	Yes Yes No	External External N/A	
DC-2.5	PS: 7.1.7 TS3: 2.2.3	For non archived data, the requestor does not have the entitlement to receive the requested data. (C)	Sent a Receipt Message with Receipt code 0 to the requestor. (D)	F	Prototype Test Production	No Yes N/A	Yes Yes No	External External N/A	
DC-2.6	PS: 7.1.7 TS3: 2.2.3	For archived data the requestor does not have the entitlement to receive the requested data. The message Request Type parameter value is 7. (C)	Sent a Receipt Message (Message Type 7) with Receipt code 0 to the requestor. (D)	F	Prototype Test Production	No Yes N/A	No Yes No	External External N/A	
DC-2.7	PS: 7.1.7 TS3: 2.2.3	DC1 receives an archived data request for a registered ship that didn't transmit LRIT Information in the period inside the request duration. The message Request Type parameter value is 7. (C)	Send a Receipt Message (Message Type 7) with Receipt code 5 or 6 to the requestor DC. (D)	F	Prototype Test Production	No Yes N/A	Yes Yes No	External External N/A	

Test	REF	Case	Expect results	Test type	Environment	Required before entering	Required during	Certification	Pass/Fail
DC-2.8	PS: 7.1.7 TS3: 2.2.3	DC1 receives an archived data request for a ship that was not registered to the DC during the time of the archived request. The message Request Type parameter value is 7. (C)	Send a Receipt Message (Message Type 7) with Receipt code 7 to LDU. (D)	F	Prototype Test Production	No Yes N/A	Yes Yes No	External External N/A	
DC-2.9	PS: 7.1.7 TS3: 2.2.3	DC1 receives an archived data request for a ship that transmitted LRIT Information in the period inside the request duration. The message Request Type parameter value is 7. (C)	DC sends all requested LRIT position reports to the requestor. (D)	F	Prototype Test Production	No Yes N/A	Yes Yes No	External External N/A	

Table 2.2.1

Test cases for test DC-2.1
(Message Type 4)

Not all tests from this table are required to be externally certified. Test cases which require external certification are specified in the Summary report set out in Appendix 5. DCs should disregard the contents of all fields that indicate having "Not valid" or "Null" parameters when processing LRIT position request messages from another DC. Section 2.3.8 of the Technical specifications for communications within the LRIT system provides additional information on valid messages parameters combinations for Messages 4 and 5.

Test case					Expected Result	Pass/Fail
Access Type	Request Type	Port or port facility	Distance	Request duration		
0	0	Null	zero (0)	Null	DC1 verifies that all previous terminal change requests have been reset.	
	1	Null	zero (0)	Null	DC1 sends a receipt message to DC2 with a receipt code of 7. (D)	
	2	Null	zero (0)	Null	DC1 sends a receipt message to DC2 with a receipt code of 7. (D)	
	3	Null	zero (0)	Null	DC1 sends a receipt message to DC2 with a receipt code of 7. (D)	
	4	Null	zero (0)	Null	DC1 sends a receipt message to DC2 with a receipt code of 7. (D)	
	5	Null	zero (0)	Null	DC1 sends a receipt message to DC2 with a receipt code of 7. (D)	
	6	Null	zero (0)	Null	DC1 sends a receipt message to DC2 with a receipt code of 7. (D)	
	7	Null	zero (0)	Null	DC1 sends a receipt message to DC2 with a receipt code of 7. (D)	
	8	Null	zero (0)	Null	DC1 sends a receipt message to DC2 with a receipt code of 7. (D)	
	9	Null	zero (0)	Null	DC1 sends a receipt message to DC2 with a receipt code of 7. (D)	
	10	Null	zero (0)	Null	DC1 sends a receipt message to DC2 with a receipt code of 7. (D)	
	11	Null	zero (0)	Null	DC1 sends a receipt message to DC2 with a receipt code of 7. (D)	

Test case					Expected Result	Pass/Fail
Access Type	**Request Type**	**Port or port facility**	**Distance**	**Request duration**		
1	0	Null	zero (0)	Null	DC1 sends a receipt message to DC2 with a receipt code of 7. (D)	
	1	Null	zero (0)	Null	DC1 sends the appropriate position report to DC2 (D).	
	2	Null	zero (0)	Valid entry	DC1 sends the first position report to DC2 (D) within the specified periodic rate plus 30 min. All following reports are synchronized to the specified rate for the specified duration.	
	3	Null	zero (0)	Valid entry	DC1 sends the first position report to DC2 (D) within the specified periodic rate plus 30 min. All following reports are synchronized to the specified rate for the specified duration.	
	4	Null	zero (0)	Valid entry	DC1 sends the first position report to DC2 (D) within the specified periodic rate plus 30 min. All following reports are synchronized to the specified rate for the specified duration.	
	5	Null	zero (0)	Valid entry	DC1 sends the first position report to DC2 (D) within the specified periodic rate plus 30 min. All following reports are synchronized to the specified rate for the specified duration.	
	6	Null	zero (0)	Valid entry	DC1 sends the first position report to DC2 (D) within the specified periodic rate plus 30 min. All following reports are synchronized to the specified rate for the specified duration.	
	7	Null	zero (0)	Valid entry	DC sends all requested LRIT position reports to the requestor. (D)	
	8	Null	zero (0)	Null	DC1 stops sending position reports to DC2 (D).	
	9	Null	zero (0)	Null	DC1 sends the appropriate position report to DC2 (D).	
	10	Null	zero (0)	Null	DC1 sends the first position report to DC2 (D) within the specified periodic rate plus 30 min. All following reports are synchronized to the specified rate for the specified duration.	

Test case					Expected Result	Pass/Fail
Access Type	**Request Type**	**Port or port facility**	**Distance**	**Request duration**		
	11	Null	zero (0)	Null	DC1 sends the first position report to DC2 (D) within the specified periodic rate plus 30 min. All following reports are synchronized to the specified rate for the specified duration.	
2	0	Null	zero (0)	Null	DC1 sends a receipt message to DC2 with a receipt code of 7. (D)	
	1	Null	zero (0)	Null	DC1 sends a receipt message with receipt code 7 (D).	
	2	Null	zero (0)	Valid entry	DC1 sends a receipt message with receipt code 7 (D).	
	3	Null	zero (0)	Valid entry	DC1 sends a receipt message with receipt code 7 (D).	
	4	Null	zero (0)	Valid entry	DC1 sends a receipt message with receipt code 7 (D).	
	5	Null	zero (0)	Valid entry	DC1 sends a receipt message with receipt code 7 (D).	
	6	Null	zero (0)	Valid entry	DC1 sends a receipt message with receipt code 7 (D).	
	7	Null	zero (0)	Valid entry	DC sends all requested LRIT position reports to the requestor. (D) This test case is applicable to all DC types other than NDCs. If the flag State associated with the ship has changed DCs since the time the data was archived (Ex: RDC → NDC).	
	8	Null	zero (0)	Null	DC1 sends a receipt message with receipt code 7 (D).	
	9	Null	zero (0)	Null	DC1 sends a receipt message with receipt code 7 (D).	
	10	Null	zero (0)	Null	DC1 sends a receipt message with receipt code 7 (D).	
	11	Null	zero (0)	Null	DC1 sends a receipt message with receipt code 7 (D).	
3	0	Null	zero (0)	Null	DC1 sends a receipt message to DC2 with a receipt code of 7. (D)	
	1	Valid entry	Valid entry	Null	DC1 sends a receipt message with receipt code 7 (D).	

Test case					Expected Result	Pass/Fail
Access Type	**Request Type**	**Port or port facility**	**Distance**	**Request duration**		
	2	Valid entry	Valid entry	Valid entry	DC1 sends the appropriate position report to DC2 (D) when the ship is within the specified distance from the specified port/port facility and during the specified request duration.	
	3	Valid entry	Valid entry	Valid entry	DC1 sends the appropriate position report to DC2 (D) when the ship is within the specified distance from the specified port/port facility and during the specified request duration.	
	4	Valid entry	Valid entry	Valid entry	DC1 sends the appropriate position report to DC2 (D) when the ship is within the specified distance from the specified port/port facility and during the specified request duration.	
	5	Valid entry	Valid entry	Valid entry	DC1 sends the appropriate position report to DC2 (D) when the ship is within the specified distance from the specified port/port facility and during the specified request duration.	
	6	Valid entry	Valid entry	Valid entry	DC1 sends the appropriate position report to DC2 (D) when the ship is within the specified distance from the specified port/port facility and the specified request duration.	
	7	Valid entry	Valid entry	Valid entry	DC1 sends a receipt message with receipt code 7 (D).	
	8	Valid entry	Valid entry	Null	DC1 stops sending position reports to DC2 (D).	
	9	Valid entry	Valid entry	Null	DC1 sends a receipt message with receipt code 7 (D).	
	10	Valid entry	Valid entry	Valid entry	DC1 sends the appropriate position report to DC2 (D) when the ship is within the specified distance from the specified port/port facility and during the specified request duration.	
	11	Valid entry	Valid entry	Valid entry	DC1 sends the appropriate position report to DC2 (D) when the ship is within the specified distance from the specified port/port facility and during the specified request duration.	
4	*This access type has been reserved for future use.*					

Test case					Expected Result	Pass/Fail
Access Type	**Request Type**	**Port or port facility**	**Distance**	**Request duration**		
5	0	Null	zero (0)	Null	DC1 sends a receipt message to DC2 with a receipt code of 7. (D)	
	1	Valid entry	zero (0)	Null	DC1 sends the appropriate position report to DC2 (D).	
	2	Valid entry	zero (0)	Valid entry	DC1 sends the first position report to DC2 (D) within the specified periodic rate plus 30 min. All following reports are synchronized to the specified rate for the specified duration.	
	3	Valid entry	zero (0)	Valid entry	DC1 sends the first position report to DC2 (D) within the specified periodic rate plus 30 min. All following reports are synchronized to the specified rate for the specified duration.	
	4	Valid entry	zero (0)	Valid entry	DC1 sends the first position report to DC2 (D) within the specified periodic rate plus 30 min. All following reports are synchronized to the specified rate for the specified duration.	
	5	Valid entry	zero (0)	Valid entry	DC1 sends the first position report to DC2 (D) within the specified periodic rate plus 30 min. All following reports are synchronized to the specified rate for the specified duration.	
	6	Valid entry	zero (0)	Valid entry	DC1 sends the first position report to DC2 (D) within the specified periodic rate plus 30 min. All following reports are synchronized to the specified rate for the specified duration.	
	7	Valid entry	zero (0)	Valid entry	DC sends all requested LRIT position reports to the requestor. (D)	
	8	Valid entry	zero (0)	Null	DC1 stops sending position reports to DC2 (D).	
	9	Valid entry	zero (0)	Null	DC1 sends the appropriate position report to DC2 (D).	
	10	Valid entry	zero (0)	Valid entry	DC1 sends the first position report to DC2 (D) within the specified periodic rate plus 30 min. All following reports are synchronized to the specified rate for the specified duration.	

Test case					Expected Result	Pass/Fail
Access Type	**Request Type**	**Port or port facility**	**Distance**	**Request duration**		
	11	Valid entry	zero (0)	Valid entry	DC1 sends the first position report to DC2 (D) within the specified periodic rate plus 30 min. All following reports are synchronized to the specified rate for the specified duration.	

Table 2.2.2

Test cases for test DC-2.1
(Message Type 5)

Not all tests from this table are required to be externally certified. Test cases which require external certification are specified in the Summary report set out in Appendix 5. DCs should disregard the contents of all fields that indicate having "Not valid" or "Null" parameters when processing LRIT position request messages from another DC. Section 2.3.8 of the Technical specifications for communications within the LRIT system provides additional information on valid messages parameters combinations for Messages 4 and 5.

Test case					Expected Result	Pass/Fail
Access Type	**Request Type**	**Port or port facility**	**Distance**	**Request duration**		
6	1	Not valid	zero (0)	Null	DC1 sends the appropriate position report to DC2 (D).	
	7	Not valid	zero (0)	Valid	DC1 sends the appropriate position report to DC2 (D).	
	9	Not valid	zero (0)	Null	DC1 sends the appropriate position report to DC2 (D).	

Table 2.3

Test procedure DC-3.0

Test	REF	Test procedure	Pass/Fail
DC-3.0	PS: 7.7 TS3: 2.2.4 TS3:2.3.9	DC1 receives a SAR SURPIC Request (Message Type 6) sent by another DC (C). Communication paths specified in parentheses for each test case. All parameters associated with each message should be valid unless specified otherwise in a given test case.	

Test cases DC-3.1 to DC-3.3

Test	REF	Case	Expect results	Test type	Environment	Required before entering	Required during	Certification	Pass/Fail
DC-3.1	PS: 7.7 TS3: 2.2.4 TS3:2.3.9	DC1 receives a SAR SURPIC Request Message with all valid data parameters, a specified circular area and the number of positions requested to 2. (C)	DC1 sends the 2 most recent position reports for all ships that are located within the specified geographical area. (D)	F	Prototype Test Production	No Yes N/A	Yes Yes No	External External N/A	
DC-3.2	PS: 7.7 TS3: 2.2.4 TS3:2.3.9	DC1 receives a SAR SURPIC Request Message with all valid data parameters, a specified rectangular area and the number of positions requested to 2. (C)	DC1 sends the 2 most recent position reports for all ships that are located within the specified geographical area. (D)	F	Prototype Test Production	No Yes N/A	Yes Yes No	External External N/A	

Test	REF	Case	Expect results	Test type	Environment	Required before entering	Required during	Certification	Pass/Fail
DC-3.3	PS: 7.7 TS3: 2.2.4	Message validation with invalid Message parameter. (C)	The DC does not need to log or archive the message. A SOAP Fault or Receipt Message with Receipt code 7 is sent with message text indicating the reason for rejection. (D)	C	Prototype Test Production	No No N/A	Yes Yes No	Internal Internal N/A	

Table 2.4

Test procedure DC-4.0

Test	REF	Test procedure	Pass/Fail
DC-4.0	PS: 7.1 TS3: 2.2.5	DC1 receives a receipt (Message Type 7) sent by another DC (C). Communication paths specified in parentheses for each test case. All parameters associated with each message should be valid unless specified otherwise in a given test case.	

Test cases DC-4.1 to DC-4.2

Test	REF	Case	Expect results	Test type	Environment	Required before entering	Required during	Certification	Pass/Fail
DC-4.1	PS: 7.1 TS3: 2.2.5	DC receives Receipt Message from IDE with all valid Message parameters. (C)	Verify reception of message and no further action required by DC. The DC does not need to log or archive the message.	C	Prototype Test Production	No No N/A	Yes Yes No	Internal Internal N/A	
DC-4.2	PS: 7.1 TS3: 2.2.5	Message validation with invalid Message parameter. (C)	The DC does not need to log or archive the message. A SOAP Fault or Receipt Message with Receipt code 7 is sent with message text indicating the reason for rejection. (D)	C	Prototype Test Production	No No N/A	Yes Yes No	Internal Internal N/A	

Table 2.5

Test procedure DC-5.0

Test	REF	Test procedure	Pass/Fail
DC-5.0	PS: 7.1 TS3: 2.2.9	DC1 receives a System Status Message (Message Type 11) sent by the IDE. Communication paths specified in parentheses for each test case. All parameters associated with each message should be valid unless specified otherwise in a given test case.	

Test cases DC-5.1 to DC-5.2

Test	REF	Case	Expect results	Test type	Environment	Required before entering	Required during	Certification	Pass/Fail
DC-5.1	PS: 7.1 TS3: 2.2.9	DC receives System Status Message from IDE with all valid Message parameters. (C)	Verify reception of message and no further action required by DC. The DC does not need to log or archive the message.	C	Prototype Test Production	No No N/A	Yes Yes Yes	Internal Internal Internal	
DC-5.2	PS: 7.1 TS3: 2.2.9	Message validation with invalid Message parameter. (C)	The DC does not need to log or archive the message. A SOAP Fault or Receipt Message with Receipt code 7 is sent with message text indicating the reason for rejection. (D)	C	Prototype Test Production	No No N/A	Yes Yes No	Internal Internal N/A	

Table 2.6

Test procedure DC-6.0

Test	REF	Test procedure	Pass/Fail
DC-6.0	PS: 7.1 TS3: 2.2.9	DC1 sends a System Status Message (Message Type 11) to the IDE. Communication paths specified in parentheses for each test case. All parameters associated with each message should be valid unless specified otherwise in a given test case.	

Test case DC-6.1

Test	REF	Case	Expect results	Test type	Environment	Required before entering	Required during	Certification	Pass/Fail
DC-6.1	PS: 7.1 TS3: 2.2.9	Check if DC sends System Status Message every 30 min to IDE with all valid Message parameters. (D)	Verify transmission of message.	F	Prototype Test Production	No Yes N/A	Yes Yes Yes	External External External	

Table 2.7

Test procedure DC-7.0

Test	REF	Test procedure	Pass/Fail
DC-7.0	PS: 7.1 TS3: 2.2.11	DC1 receives a pricing notification message (Message Type 13) from the IDE. Communication paths specified in parentheses for each test case. All parameters associated with each message should be valid unless specified otherwise in a given test case.	

Test case DC-7.1

Test	REF	Case	Expect results	Test type	Environment	Required before entering	Required during	Certification	Pass/Fail
DC-7.1	PS: 7.4 TS3: 2.2.11	DC receives pricing notification message from IDE with all valid Message parameters. (C)	Verify reception of message and no further action required by DC. The DC does not need to log or archive the message.	C	Prototype Test Production	No Yes N/A	Yes Yes No	External External N/A	

Table 2.8

Test procedure DC-8.0

Test	REF	Test procedure	Pass/Fail
DC-8.0	PS: 7.4 TS3: 2.2.12	DC1 sends a Pricing request message (Message Type 14) to the IDE. Communication paths specified in parentheses for each test case. All parameters associated with each message should be valid unless specified otherwise in a given test case.	

Test case DC-8.1

Test	REF	Case	Expect results	Test type	Environment	Required before entering	Required during	Certification	Pass/Fail
DC-8.1	PS: 7.4 TS3: 2.2.12	DC sends a pricing request message to the IDE with all valid Message parameters. (D)	Verify correct transmission of message and no further action required by DC.	C	Prototype Test Production	No Yes N/A	Yes Yes Yes	External External External	

Table 2.9

Test procedure DC-9.0

Test	REF	Test procedure	Pass/Fail
DC-9.0	PS: 7.4 TS3: 2.2.13 TS3:2.3.11	DC1 receives a Pricing Update Message (Message Type 15) from the IDE. Communication paths specified in parentheses for each test case. All parameters associated with each message should be valid unless specified otherwise in a given test case.	

Test cases DC-9.1 to 9.2

Test	REF	Case	Expect results	Test type	Environment	Required before entering	Required during	Certification	Pass/Fail
DC-9.1	PS: 7.4 TS3: 2.2.13 TS3:2.3.11	DC receives Pricing Update Message from IDE with all valid Message parameters. (C)	Verify reception of message and no further action required by DC.	C	Prototype Test Production	No Yes N/A	Yes Yes Yes	External External External	
DC-9.2	PS: 7.4 TS3: 2.2.13	Message validation with invalid Message parameter. (C)	The DC does not need to log or archive the message. A SOAP Fault or Receipt Message with Receipt code 7 is sent with message text indicating the reason for rejection. (D)	C	Prototype Test Production	No No N/A	Yes Yes No	Internal Internal N/A	

Table 2.10

Test procedure DC-10.0

Test	REF	Test procedure	Pass/Fail
DC-10.0	PS: 7.4 TS3: 2.2.13 TS3:2.3.11	DC1 sends a Pricing Update Message (Message Type 15) to the IDE. Communication paths specified in parentheses for each test case. All parameters associated with each message should be valid unless specified otherwise in a given test case.	

Test case DC-10.1

Test	REF	Case	Expect results	Test type	Environment	Required before entering	Required during	Certification	Pass/Fail
DC-10.1	PS: 7.4 TS3: 2.2.13 TS3:2.3.11	DC sends a pricing Update message to the IDE with all valid Message parameters. (D)	Verify correct transmission of message and no further action required by the DC.	C	Prototype Test Production	No Yes N/A	Yes Yes No	External External N/A	

Table 2.11

Test procedure DC-11.0

Test	REF	Test procedure	Pass/Fail
DC-11.0	PS: 7.1 PS: 7.6 TS3: 2.2.6	DC1 receives a DDP Notification Message (Message Type 8) from the IDE. Communication paths specified in parentheses for each test case. All parameters associated with each message should be valid unless specified otherwise in a given test case.	

Test cases DC-11.1 to 11.3

Test	REF	Case	Expect results	Test type	Environment	Required before entering	Required during	Certification	Pass/Fail
DC-11.1	PS: 7.1 PS: 7.6 TS3: 2.2.6	DC1 receives a DDP Notification Message from IDE with all valid Message parameters with an immediate DDP update type. (C)	DC sends a DDP Request Message (Message Type 9) to the DDP server with the DDP update type parameter set to either 1 (with requested version number parameter) or 2 within 1 hr of receiving the notification. (L)	F	Prototype Test Production	No Yes N/A	Yes Yes No	External External N/A	
DC-11.2	PS: 7.1 PS: 7.6 TS3: 2.2.6	DC receives a DDP Notification Message from IDE with all valid Message parameters with a regular DDP update type. (C)	DC sends a DDP Request Message (Message Type 9) to the DDP server with the DDP update type parameter set to either 0 or 2 before midnight UTC. (L)	F	Prototype Test Production	No Yes N/A	Yes Yes No	External External N/A	

Test	REF	Case	Expect results	Test type	Environment	Required before entering	Required during	Certification	Pass/Fail
DC-11.3	PS: 7.1 PS: 7.6 TS3: 2.2.6	Message validation with invalid Message parameter. (C)	The DC does not need to log or archive the message. A SOAP Fault or Receipt Message with Receipt code 7 is sent with message text indicating the reason for rejection. (D)	C	Prototype Test Production	No No N/A	Yes Yes No	Internal Internal N/A	

Table 2.12

Test procedure DC-12.0

Test	REF	Test procedure	Pass/Fail
DC-12.0	PS: 7.1 PS: 7.6 TS3: 2.2.7	DC1 sends a DDP Request message (Message Type 9) to the DDP server. Communication paths specified in parentheses for each test case. All parameters associated with each message should be valid unless specified otherwise in a given test case.	

Test case DC-12.1

Test	REF	Case	Expect results	Test type	Environment	Required before entering	Required during	Certification	Pass/Fail
DC-12.1	PS: 7.1 PS: 7.6 TS3: 2.2.7	DC sends a DDP Request Message to the DDP server with all valid Message parameters. (L)	Verify that the DC can send a DDP Request Message.	C	Prototype Test Production	No Yes N/A	Yes Yes Yes	External External External	

Table 2.13

Test procedure DC-13.0

Test	REF	Test procedure	Pass/Fail
DC-13.0	PS: 7.1 PS: 7.6 TS3: 2.2.8	DC1 receives a DDP Update Message (Message Type 10) from the DDP server. Communication paths specified in parentheses for each test case. All parameters associated with each message should be valid unless specified otherwise in a given test case.	

Test cases DC-13.1 to 13.4

Test	REF	Case	Expect results	Test type	Environment	Required before entering	Required during	Certification	Pass/Fail
DC-13.1	PS: 7.1 PS: 7.6 TS3: 2.2.8	DC receives a DDP Update Message from the DDP server with all valid Message parameters. The DDP file attachment is an immediate incremental type. (K)	DC implements the DDP update at the specified implementation time. Verify that all subsequent messages sent by the DC contain the correct DDP version number.	F	Prototype Test Production	No No N/A	Yes Yes No	External External N/A	
DC-13.2	PS: 7.1 PS: 7.6 TS3: 2.2.8	DC receives a DDP Update Message from the DDP server with all valid Message parameters. The DDP file attachment is a regular incremental type. (K)	DC implements the DDP update at the specified implementation time. Verify that all subsequent messages sent by the DC contain the correct DDP version number.	F	Prototype Test Production	No No N/A	Yes Yes No	External External N/A	

Test	REF	Case	Expect results	Test type	Environment	Required before entering	Required during	Certification	Pass/Fail
DC-13.3	PS: 7.1 PS: 7.6 TS3: 2.2.8	DC receives a DDP Update Message from the DDP server with all valid Message parameters. The DDP file attachment is a full type. (K)	DC implements the DDP update at the specified implementation time. Verify that all subsequent messages sent by the DC contain the correct DDP version number.	F	Prototype Test Production	No No N/A	Yes Yes No	External External N/A	
DC-13.4	PS: 7.1 PS: 7.6 TS3: 2.2.8	Message validation with invalid Message parameter. (K)	The DC does not need to log or archive the message. A SOAP Fault or Receipt Message with Receipt code 7 is sent with message text indicating the reason for rejection. (L)	C	Prototype Test Production	No No N/A	Yes Yes No	Internal Internal N/A	

Table 2.14

Test procedure R/CDC-14.0

Test	REF	Test procedure	Pass/Fail
R/CDC-14.0	PS: 7.1 PS: 7.3 TS3: 2.2.10 TS3:2.3.10	R/CDC1 sends the Journal message (Message Type 12) to the IDE. Communication paths specified in parentheses for each test case. All parameters associated with each message should be valid unless specified otherwise in a given test case.	

Test case R/CDC-14.1

Test	REF	Case	Expect results	Test type	Environment	Required before entering	Required during	Certification	Pass/Fail
R/CDC-14.1	PS: 7.1 PS: 7.3 TS3: 2.2.10 TS3:2.3.10	R/CDC sends a Journal message to the IDE with all valid Message parameters. (D)	Verify that the R/CDC can send a Journal message containing a valid Journal file.	F	Prototype Test Production	No Yes N/A	Yes Yes No	External External N/A	

Table 2.15

Test procedure DC-15.0

Test	REF	Test procedure	Pass/Fail
DC-15.0	PS: 7.1.7 TS3:2.2.2 TS3:2.3.4	DC1 sends a ship Position Report (Message Type 1) to DC2 through the IDE in response to standing orders from a Contracting Government associated with DC2. All parameters associated with each message should be valid unless specified otherwise in a given test case.	

Test cases DC-15.1 to DC-15.3

Test	REF	Case	Expect results	Test type	Environment	Required before entering	Required during	Certification	Pass/Fail
DC-15.1	PS: 7.1.7 TS3:2.2.2 TS3:2.3.4	DC1 receives a position report from their ASP that is within the custom coastal polygon of a Contracting Government associated with DC2 with all valid parameters. The ship position is neither within the internal waters of another Contracting Government nor the territorial sea of the Contracting Government whose flag the ship is flying.	DC1 sends the appropriate position report to DC2. (D)	F	Prototype Test Production	No Yes N/A	Yes Yes No	External External N/A	

Test	REF	Case	Expect results	Test type	Environment	Required before entering	Required during	Certification	Pass/Fail
DC-15.2	PS: 7.1.7 TS3:2.2.2 TS3:2.3.4	DC1 receives a position report from their ASP that is within the custom coastal polygon of a Contracting Government associated with DC2 with all valid parameters. The ship position is within the internal waters of another Contracting Government.	DC1 does not send any position reports to DC2.	F	Prototype Test Production	No Yes N/A	Yes Yes No	External External N/A	
DC-15.3	PS: 7.1.7 TS3:2.2.2 TS3:2.3.4	DC1 receives a position report from their ASP that is within the custom coastal polygon of a Contracting Government associated with DC2 with all valid parameters. The ship position is within the territorial sea of the Contracting Government whose flag the ship is flying.	DC1 does not send any position reports to DC2.	F	Prototype Test Production	No Yes N/A	Yes Yes No	External External N/A	

Table 2.16

Test procedure DC-16.0

Test	REF	Test procedure	Pass/Fail
DC-16.0	PS: 7.1.7 TS3:2.2.2 TS3:2.3.4	DC1 receives a port State request from a Contracting Government associated with DC2 for a ship that is going through the internal waters of another Contracting Government. All parameters associated with each message should be valid unless specified otherwise in a given test case.	

Test cases DC-16.1 to DC-16.2

Test	REF	Case	Expect results	Test type	Environment	Required before entering	Required during	Certification	Pass/Fail
DC-16.1	PS: 7.1.7 TS3:2.2.2 TS3:2.3.4	DC1 receives a position report from their ASP of the ship that is tracked by the port State request and it is within the internal waters polygon of another Contracting Government.	Sending of position reports to DC2 is temporarily suspended and a receipt message with receipt code of 0 is sent to DC2 with an appropriate description indicating that the reporting has been suspended.	F	Prototype Test Production	No Yes N/A	Yes Yes No	External External N/A	

Test	REF	Case	Expect results	Test type	Environment	Required before entering	Required during	Certification	Pass/Fail
DC-16.2	PS: 7.1.7 TS3:2.2.2 TS3:2.3.4	DC1 receives a position report from their ASP of the ship that is tracked by the port State request and it is not within the internal waters polygon of another Contracting Government. (Ship has just left the internal waters of another Contracting Government and the port State request had been suspended).	Sending of position reports to DC2 is reactivated with the same reporting rate or a less frequent reporting rate.	F	Prototype Test Production	No Yes N/A	Yes Yes No	External External N/A	

Appendix 2-A

LRIT DATA CENTRE TEST PROCEDURES AND CASES

Test Procedures and cases for the first Modification testing

Table 2-A.1

Test procedure DC-17.0

Test	REF	Test procedure	Pass/Fail
DC-17.0	PS: 7.1.7 TS3: 2.2.3	DC1 receives a Ship Position Poll Request (Message Type 4, Access Type 5, Request Type 1) sent by another LRIT Data Centre (DC2) through IDE (C). Communication paths specified in parentheses for each test case. All parameters associated with each message should be valid unless specified otherwise in a given test case.	

Test cases DC-17.1 to DC-17.3

Test	REF	Case	Expect results	Test type	Environment	Required before entering	Required during	Certification	Pass/Fail
DC-17.1	PS: 7.1.7 TS3: 2.2.3 TS3:2.2.1.4	DC1 receives a position request Message from a contracting government with a valid port parameter (a port listed under the special adminstrative region of the contracting government).	DC1 sends the appropriate position report. (D) All timestamps should be in accordance with the provision of TS3	F/C	Prototype Test Production	N/A Yes N/A	N/A Yes No	N/A Internal N/A	
DC-17.2	PS: 7.1.7 TS3: 2.2.3 TS3:2.2.1.4	DC1 receives a position request Message from a special administratvive region with an invalid port parameter (a port listed under the contracting government associated with the special adminstratvive region's contracting government).	DC1 sends a receipt message with receipt code 0 (not entitled to data). (D) All timestamps should be in accordance with the provision of TS3	F/C	Prototype Test Production	N/A Yes N/A	N/A Yes No	N/A Internal N/A	
DC-17.3	PS: 7.1.7 TS3: 2.2.3 TS3:2.2.1.4	DC1 receives a SAR request Message with all valid parameters. Tests should be performed for all test cases as stipulated in Table 2-A.1.1. (C)	DC1 sends the appropriate position report or receipt for each test case to DC2. (D) All timestamps should be in accordance with the provision of TS3	F/C	Prototype Test Production	N/A Yes N/A	N/A Yes No	N/A Internal N/A	

Table 2-A.1.1

Test case					Expected Result	Pass/Fail
Access Type	**Request Type**	**Port or port facility**	**Distance**	**Request duration**		
6	7	Not valid	zero (0)	Valid	DC1 sends the appropriate position reports to DC2 (D).	
	9	Not valid	zero (0)	Null	DC1 sends the appropriate position report to DC2 (D).	

Table 2-A.2

Test procedure DC-8.0

Test	REF	Test procedure	Pass/Fail
DC-8.0	PS: 7.4 TS3: 2.2.12	DC1 sends a Pricing request message (Message Type 14) to the IDE. Communication paths specified in parentheses for each test case. All parameters associated with each message should be valid unless specified otherwise in a given test case.	

Test case DC-8.1

Test	REF	Case	Expect results	Test type	Environment	Required before entering	Required during	Certification	Pass/Fail
DC-8.1	PS: 7.4 TS3: 2.2.12	DC sends a pricing request message to the IDE with all valid Message parameters. (D)	Verify correct transmission of message and no further action required by DC.	C	Prototype Test Production	N/A Yes N/A	N/A Yes Yes	N/A External External	

Appendix 3

International LRIT Data Exchange test procedures and cases

The Pass/Fail column of a particular test case indicates the results of the specific test. A pass entry should be made when the test has been satisfactorily conducted and the results are satisfactory. A fail entry should be made when either the test cannot be conducted or the envisaged test cannot be satisfactorily carried out or the results of the test are not satisfactory.
The Pass/Fail column of a particular test procedure summarizes the results of the associated test cases. A pass entry should be made when all associated test cases have been satisfactorily conducted and their results are satisfactory. A fail entry should be made when the test of anyone of the associated test cases cannot be conducted or the envisaged test cannot be satisfactorily carried out or the results of the test are not satisfactory.

Table 3.1

Test procedures IDE-1.0

Test	REF	Test procedure	Pass/Fail
IDE-1.0	PS: 10.3.1 to PS: 10.3.4 PS: 10.3.7 to PS: 10.3.13 PS: 12.1 TS1: 2.1.1 TS1: 3.2.1 TS3: 2.1.2 TS3: 2.2.2 TS3: 2.3.1	IDE receives a position report from DC1. Communication paths specified in parentheses for each test case. All parameters associated with each message should be valid unless specified otherwise in a given test case.	

Test cases IDE-1.1 to IDE-1.22

Test	REF	Case	Expect results	Test type	Environment	Required before entering	Required during	Certification	Pass/Fail
IDE-1.1	PS: 10.3.1 to PS: 10.3.4 PS: 10.3.7 to PS: 10.3.13 TS1: 2.1.1 TS1: 3.2.1 TS3: 2.1.2 TS3: 2.2.2 TS3: 2.3.1	IDE receives a position report with an invalid LRIT Data User Requestor parameter. (D)	Message stored in Journal, Receipt Message with Receipt code 7 is sent to the originator (C) and no further action is taken.	F	Prototype Test Production	No No No	Yes Yes No	External External No	
IDE-1.2	PS: 10.3.1 to PS: 10.3.4 PS: 10.3.7 to PS: 10.3.13 TS1: 2.1.1 TS1: 3.2.1 TS3: 2.1.2 TS3: 2.2.2 TS3: 2.3.1	IDE receives a position report with an invalid DDP version number parameter (Not a SAR message). (D)	Message stored in Journal, Receipt Message with Receipt code 9 is sent to the originator (C) and no further action is taken.	F	Prototype Test Production	No No No	Yes Yes No	External External No	
IDE-1.3	PS: 10.3.1 to PS: 10.3.4 PS: 10.3.7 to PS: 10.3.13 PS: 12.1 TS1: 2.1.1 TS1: 3.2.1 TS3: 2.1.2 TS3: 2.2.2 TS3: 2.3.1	The LRIT ID of the Data User Provider does not correlate with the LRIT ID found in the certificate of the sender. (D)	Message stored in Journal, Receipt Message with Receipt code 7 is sent to the originator (C) and no further action is taken.	F	Prototype Test Production	No No No	Yes Yes No	External External No	

Test	REF	Case	Expect results	Test type	Environment	Required before entering	Required during	Certification	Pass/Fail
IDE-1.4	PS: 10.3.1 to PS: 10.3.4 PS: 10.3.7 to PS: 10.3.13 TS1: 2.1.1 TS1: 3.2.1 TS3: 2.1.2 TS3: 2.2.2 TS3: 2.3.1	The LRIT ID of the Data User Provider is invalid. (D)	Message stored in Journal, Receipt Message with Receipt code 7 (C) is sent to the originating DC as identified in the PKI certificate and no further action is taken.	F	Prototype Test Production	No No No	Yes Yes No	External External No	
IDE-1.5	PS: 10.3.1 to PS: 10.3.4 PS: 10.3.7 to PS: 10.3.13 TS1: 2.1.1 TS1: 3.2.1 TS3: 2.1.2 TS3: 2.2.2 TS3: 2.3.1	SAR periodic position report sent with all valid parameters. (D)	Message stored in Journal and routed appropriately by IDE. (F)	F	Prototype Test Production	No No No	Yes Yes Yes	External External External	
IDE-1.6	PS: 10.3.1 to PS: 10.3.4 PS: 10.3.7 to PS: 10.3.13 TS1: 2.1.1 TS1: 3.2.1 TS3: 2.1.2 TS3: 2.2.2 TS3: 2.3.1	SAR periodic position report sent with invalid LRIT Data User Requestor parameter. (D)	Message stored in Journal, Receipt Message with Receipt code 7 (C) is sent to the originator and no further action is taken.	F	Prototype Test Production	No No No	Yes Yes No	External External No	

Test	REF	Case	Expect results	Test type	Environment	Required before entering	Required during	Certification	Pass/Fail
IDE-1.7	PS: 10.3.1 to PS: 10.3.4 PS: 10.3.7 to PS: 10.3.13 TS1: 2.1.1 TS1: 3.2.1 TS3: 2.1.2 TS3: 2.2.2 TS3: 2.3.1	SAR periodic position report sent with invalid DDP version number parameter. (D)	Message stored in Journal, position report routed to destination. (F)	F	Prototype Test Production	No No No	Yes Yes No	External External No	
IDE-1.8	PS: 10.3.1 to PS: 10.3.4 PS: 10.3.7 to PS: 10.3.13 PS: 12.1 TS1: 2.1.1 TS1: 3.2.1 TS3: 2.1.2 TS3: 2.2.2 TS3: 2.3.1	SAR periodic position report sent with the LRIT ID of the Data User Provider not correlating with the LRIT ID found in the certificate of the sender. (D)	Message stored in Journal, Receipt Message with Receipt code 7 (C) is sent to the originator and no further action is taken.	F	Prototype Test Production	No No No	Yes Yes No	External External No	
IDE-1.9	PS: 10.3.1 to PS: 10.3.4 PS: 10.3.7 to PS: 10.3.13 TS1: 2.1.1 TS1: 3.2.1 TS3: 2.1.2 TS3: 2.2.2 TS3: 2.3.1	SAR periodic position report sent with an invalid Data User Provider parameter. (D)	Message stored in Journal, Receipt Message with Receipt code 7 (C) is sent to the originating DC as identified in the PKI certificate and no further action is taken.	F	Prototype Test Production	No No No	Yes Yes No	External External No	

Test	REF	Case	Expect results	Test type	Environment	Required before entering	Required during	Certification	Pass/Fail
IDE-1.10	PS: 10.3.1 to PS: 10.3.4 PS: 10.3.7 to PS: 10.3.13 TS1: 2.1.1 TS1: 3.2.1 TS3: 2.1.2 TS3: 2.2.2 TS3: 2.3.1	SAR periodic position report sent with an invalid Data User Requestor parameter. (D)	Message stored in Journal, Receipt Message with Receipt code 7 (C) is sent to the originator and no further action is taken.	F	Prototype Test Production	No No No	Yes Yes No	External External No	
IDE-1.11	PS: 10.3.1 to PS: 10.3.4 PS: 10.3.7 to PS: 10.3.13 TS1: 2.1.1 TS1: 3.2.1 TS3: 2.1.2 TS3: 2.2.2 TS3: 2.3.1	Polled position report sent with an invalid DDP version number parameter. (D)	Message stored in Journal, Receipt Message with Receipt code 9 (C) is sent to the originator and no further action is taken.	F	Prototype Test Production	No No No	Yes Yes No	External External No	
IDE-1.12	PS: 10.3.1 to PS: 10.3.4 PS: 10.3.7 to PS: 10.3.13 PS: 12.1 TS1: 2.1.1 TS1: 3.2.1 TS3: 2.1.2 TS3: 2.2.2 TS3: 2.3.1	Polled position report sent with the LRIT ID of the Data User Provider not correlating with the LRIT ID found in the certificate of the sender. (D)	Message stored in Journal, Receipt Message with Receipt code 7 sent to DC associated with the Data User Provider and no further action is taken.	F	Prototype Test Production	No No No	Yes Yes No	External External No	

Test	REF	Case	Expect results	Test type	Environment	Required before entering	Required during	Certification	Pass/Fail
IDE-1.13	PS: 10.3.1 to PS: 10.3.4 PS: 10.3.7 to PS: 10.3.13 TS1: 2.1.1 TS1: 3.2.1 TS3: 2.1.2 TS3: 2.2.2 TS3: 2.3.1	Polled position report sent with an invalid Data User Provider. (D)	Message stored in Journal, Receipt Message with Receipt code 7 (C) is sent to the originator and no further action is taken.	F	Prototype Test Production	No No No	Yes Yes No	External External No	
IDE-1.14	PS: 10.3.1 to PS: 10.3.4 PS: 10.3.7 to PS: 10.3.13 TS1: 2.1.1 TS1: 3.2.1 TS3: 2.1.2 TS3: 2.2.2 TS3: 2.3.1	Polled position report sent with all valid parameters. (D)	Message stored in Journal, IDE routes position report to the appropriate DC. (F)	F	Prototype Test Production	No No No	Yes Yes No	External External No	
IDE-1.15	PS: 10.3.1 to PS: 10.3.4 PS: 10.3.7 to PS: 10.3.13 TS1: 2.1.1 TS1: 3.2.1 TS3: 2.1.2 TS3: 2.2.2 TS3: 2.3.1	SAR Polled position report (Message Type 2, Response Type 4) sent with an invalid LRIT Data User Requestor parameter. (D)	Message stored in Journal, Receipt Message with Receipt code 7 (C) is sent to the originator and no further action is taken.	F	Prototype Test Production	No No No	Yes Yes No	External External No	

Test	REF	Case	Expect results	Test type	Environment	Required before entering	Required during	Certification	Pass/Fail
IDE-1.16	PS: 10.3.1 to PS: 10.3.4 PS: 10.3.7 to PS: 10.3.13 TS1: 2.1.1 TS1: 3.2.1 TS3: 2.1.2 TS3: 2.2.2 TS3: 2.3.1	SAR Polled position report (Message Type 2, Response Type 4) sent with an invalid DDP version number parameter. (D)	Message stored in Journal, IDE routes position report to the appropriate DC. (F)	F	Prototype Test Production	No No No	Yes Yes No	External External No	
IDE-1.17	PS: 10.3.1 to PS: 10.3.4 PS: 10.3.7 to PS: 10.3.13 PS: 12.1 TS1: 2.1.1 TS1: 3.2.1 TS3: 2.1.2 TS3: 2.2.2 TS3: 2.3.1	SAR Polled position report (Message Type 2, Response Type 4) sent with the LRIT ID of the Data User Provider not correlating with the LRIT ID found in the certificate of the sender. (D)	Message stored in Journal, Receipt Message with Receipt code 7 (C) is sent to the originator and no further action is taken.	F	Prototype Test Production	No No No	Yes Yes No	External External No	
IDE-1.18	PS: 10.3.1 to PS: 10.3.4 PS: 10.3.7 to PS: 10.3.13 TS1: 2.1.1 TS1: 3.2.1 TS3: 2.1.2 TS3: 2.2.2 TS3: 2.3.1	SAR Polled position report (Message Type 2, Response Type 4) sent with an invalid Data User Provider parameter. (D)	Message stored in Journal, Receipt Message with Receipt code 7 (C) is sent to the originating DC as identified in the PKI certificate and no further action is taken.	F	Prototype Test Production	No No No	Yes Yes No	External External No	

Test	REF	Case	Expect results	Test type	Environment	Required before entering	Required during	Certification	Pass/Fail
IDE-1.19	PS: 10.3.1 to PS: 10.3.4 PS: 10.3.7 to PS: 10.3.13 TS1: 2.1.1 TS1: 3.2.1 TS3: 2.1.2 TS3: 2.2.2 TS3: 2.3.1	SAR position report (Message Type 3) sent with an invalid Data User Requestor parameter. (D)	Message stored in Journal, Receipt Message with Receipt code 7 (C) is sent to the originator and no further action is taken.	F	Prototype Test Production	No No No	Yes Yes No	External External No	
IDE-1.20	PS: 10.3.1 to PS: 10.3.4 PS: 10.3.7 to PS: 10.3.13 TS1: 2.1.1 TS1: 3.2.1 TS3: 2.1.2 TS3: 2.2.2 TS3: 2.3.1	SAR position report (Message Type 3) sent with an invalid DDP version number parameter. (D)	Message stored in Journal, IDE routes position report to the appropriate DC. (F)	F	Prototype Test Production	No No No	Yes Yes No	External External No	
IDE-1.21	PS: 10.3.1 to PS: 10.3.4 PS: 10.3.7 to PS: 10.3.13 TS1: 2.1.1 TS1: 3.2.1 TS3: 2.1.2 TS3: 2.2.2 TS3: 2.3.1	SAR position report (Message Type 3) sent with the LRIT ID of the Data User Provider not correlating with the LRIT ID found in the certificate of the sender. (D)	Message stored in Journal, Receipt Message with Receipt code 7 (C) is sent to the originator and no further action is taken.	F	Prototype Test Production	No No No	Yes Yes No	External External No	

Test	REF	Case	Expect results	Test type	Environment	Required before entering	Required during	Certification	Pass/Fail
IDE-1.22	PS: 10.3.1 to PS: 10.3.4 PS: 10.3.7 to PS: 10.3.13 TS1: 2.1.1 TS1: 3.2.1 TS3: 2.1.2 TS3: 2.2.2 TS3: 2.3.1	SAR position report (Message Type 3) sent with an invalid Data User Provider parameter. (D)	Message stored in Journal, Receipt Message with Receipt code 7 (C) is sent to the originating DC as identified in the PKI certificate and no further action is taken.	F	Prototype Test Production	No No No	Yes Yes No	External External No	

Table 3.2

Test procedures IDE-2.0

Test	REF	Test procedure	Pass/Fail
IDE-2.0	PS: 10.3.1 to PS: 10.3.4 PS: 10.3.7 to PS: 10.3.11 PS: 12.1 TS1: 2.1.1 TS1: 3.2.1 TS3: 2.1.2 TS3: 2.2.3 TS3: 2.3.1 TS3: 2.3.3 TS3: 2.3.5 TS3: 2.3.7	IDE receives a position request from DC1. Communication paths specified in parentheses for each test case. All parameters associated with each message should be valid unless specified otherwise in a given test case.	

Test cases IDE-2.1 to IDE-2.13

Test	REF	Case	Expect results	Test type	Environment	Required before entering	Required during	Certification	Pass/Fail
IDE-2.1	PS: 10.3.1 to PS: 10.3.4 PS: 10.3.7 to PS: 10.3.11 TS1: 2.1.1 TS1: 3.2.1 TS3: 2.1.2 TS3: 2.2.3 TS3: 2.3.1 TS3: 2.3.3 TS3: 2.3.5 TS3: 2.3.7	Ship Position Request Message (Message Type 4) sent with an invalid Data User Requestor. (D)	Message stored in Journal, Receipt Message with Receipt code 7 (C) is sent to the originating DC as identified in the PKI certificate and no further action is taken.	F	Prototype Test Production	No No No	Yes Yes No	External External No	
IDE-2.2	PS: 10.3.1 to PS: 10.3.4 PS: 10.3.7 to PS: 10.3.11 PS: 12.1 TS1: 2.1.1 TS1: 3.2.1 TS3: 2.1.2 TS3: 2.2.3 TS3: 2.3.1 TS3: 2.3.3 TS3: 2.3.5 TS3: 2.3.7	Ship Position Request Message (Message Type 4) sent with the LRIT ID of the Data User Requestor not correlating with the LRIT ID found in the certificate of the sender. (D)	Message stored in Journal, Receipt Message with Receipt code 7 (C) is sent to the originator and no further action is taken.	F	Prototype Test Production	No No No	Yes Yes No	External External No	

Test	REF	Case	Expect results	Test type	Environment	Required before entering	Required during	Certification	Pass/Fail
IDE-2.3	PS: 10.3.1 to PS: 10.3.4 PS: 10.3.7 to PS: 10.3.11 TS1: 2.1.1 TS1: 3.2.1 TS3: 2.1.2 TS3: 2.2.3 TS3: 2.3.1 TS3: 2.3.3 TS3: 2.3.5 TS3: 2.3.7	Ship Position Request Message (Message Type 4) with invalid DDP version. (D)	Message stored in Journal, Receipt Message with Receipt code 9 (C) is sent to the originator and no further action is taken.	F	Prototype Test Production	No No No	Yes Yes No	External External No	
IDE-2.4	PS: 10.3.1 to PS: 10.3.4 PS: 10.3.7 to PS: 10.3.11 TS1: 2.1.1 TS1: 3.2.1 TS3: 2.1.2 TS3: 2.2.3 TS3: 2.3.1 TS3: 2.3.3 TS3: 2.3.7	SAR Poll Request Message (Message Type 5) sent with an invalid Data User Requestor. (D)	Message stored in Journal, Receipt Message with Receipt code 7 (C) is sent to the originator and no further action is taken.	F	Prototype Test Production	No No No	Yes Yes No	External External No	

Test	REF	Case	Expect results	Test type	Environment	Required before entering	Required during	Certification	Pass/Fail
IDE-2.5	PS: 10.3.1 to PS: 10.3.4 PS: 10.3.7 to PS: 10.3.11 PS: 12.1 TS1: 2.1.1 TS1: 3.2.1 TS3: 2.1.2 TS3: 2.2.3 TS3: 2.3.1 TS3: 2.3.3 TS3: 2.3.7	SAR Poll Request Message (Message Type 5) sent with the LRIT ID of the Data User Requestor not correlating with the LRIT ID found in the certificate of the sender. (D)	Message stored in Journal, Receipt Message with Receipt code 7 (C) is sent to the originator and no further action is taken.	F	Prototype Test Production	No No No	Yes Yes No	External External No	
IDE-2.6	PS: 10.3.1 to PS: 10.3.4 PS: 10.3.7 to PS: 10.3.11 TS1: 2.1.1 TS1: 3.2.1 TS3: 2.1.2 TS3: 2.2.3 TS3: 2.3.1 TS3: 2.3.3 TS3: 2.3.7	SAR Poll Request Message (Message Type 5) sent with an invalid DDP version. (D)	Message stored in Journal, IDE routes position request to the appropriate DC. (F)	F	Prototype Test Production	No No No	Yes Yes No	External External No	

Test	REF	Case	Expect results	Test type	Environment	Required before entering	Required during	Certification	Pass/Fail
IDE-2.7	PS: 10.3.1 to PS: 10.3.4 PS: 10.3.7 to PS: 10.3.11 TS1: 2.1.1 TS1: 3.2.1 TS3: 2.1.2 TS3: 2.2.3 TS3: 2.3.1 TS3: 2.3.3 TS3: 2.3.7	SAR Poll Request Message (Message Type 5) sent with an invalid Data User Provider parameter. (D)	Message stored in Journal, Receipt Message with Receipt code 7 (C) is sent to the originator and no further action is taken.	F	Prototype Test Production	No No No	Yes Yes No	External External No	
IDE-2.8	PS: 10.3.1 to PS: 10.3.4 PS: 10.3.7 to PS: 10.3.11 TS1: 2.1.1 TS1: 3.2.1 TS3: 2.1.2 TS3: 2.2.3 TS3: 2.3.1 TS3: 2.3.3 TS3: 2.3.7	Valid SAR Poll Request Message (Message Type 5). (D)	Message stored in Journal, IDE routes position request to the appropriate DC. (F)	F	Prototype Test Production	No No No	Yes Yes Yes	External External External	

Test	REF	Case	Expect results	Test type	Environment	Required before entering	Required during	Certification	Pass/Fail
IDE-2.9	PS: 10.3.1 to PS: 10.3.4 PS: 10.3.7 to PS: 10.3.11 TS1: 2.1.1 TS1: 3.2.1 TS3: 2.1.2 TS3: 2.2.3 TS3: 2.3.1 TS3: 2.3.3 TS3: 2.3.5 TS3: 2.3.7	Valid Ship Position Request Message, Coastal (Message Type 4, Access Type 1). (D)	Message stored in Journal, IDE routes position request to the appropriate DC. (F)	F	Prototype Test Production	No No No	Yes Yes No	External External No	
IDE-2.10	PS: 10.3.1 to PS: 10.3.4 PS: 10.3.7 to PS: 10.3.11 TS1: 2.1.1 TS1: 3.2.1 TS3: 2.1.2 TS3: 2.2.3 TS3: 2.3.1 TS3: 2.3.3 TS3: 2.3.5 TS3: 2.3.7	Valid Ship Position Request Message, Flag (Message Type 4, Access Type 2). (D)	Message stored in Journal, IDE routes position request to the appropriate DC. (F)	F	Prototype Test Production	No No No	Yes Yes No	External External No	

Test	REF	Case	Expect results	Test type	Environment	Required before entering	Required during	Certification	Pass/Fail
IDE-2.11	PS: 10.3.1 to PS: 10.3.4 PS: 10.3.7 to PS: 10.3.11 TS1: 2.1.1 TS1: 3.2.1 TS3: 2.1.2 TS3: 2.2.3 TS3: 2.3.1 TS3: 2.3.3 TS3: 2.3.5 TS3: 2.3.7	Valid Ship Position Request Message, Port with distance trigger from port/port facility (Message Type 4, Access Type 3). (D)	Message stored in Journal, IDE routes position request to the appropriate DC. (F)	F	Prototype Test Production	No No No	Yes Yes No	External External No	
IDE-2.12	PS: 10.3.1 to PS: 10.3.4 PS: 10.3.7 to PS: 10.3.11 TS1: 2.1.1 TS1: 3.2.1 TS3: 2.1.2 TS3: 2.2.3 TS3: 2.3.1 TS3: 2.3.3 TS3: 2.3.5 TS3: 2.3.7	Valid Ship Position Request Message, Port with distance trigger from coast (Message Type 4, Access Type 3). (D)	Message stored in Journal, IDE routes position request to the appropriate DC. (F)	F	Prototype Test Production	No No No	Yes Yes No	External External No	

Test	REF	Case	Expect results	Test type	Environment	Required before entering	Required during	Certification	Pass/Fail
IDE-2.13	PS: 10.3.1 to PS: 10.3.4 PS: 10.3.7 to PS: 10.3.11 TS1: 2.1.1 TS1: 3.2.1 TS3: 2.1.2 TS3: 2.2.3 TS3: 2.3.1 TS3: 2.3.3 TS3: 2.3.5 TS3: 2.3.7	Valid Ship Position Request Message, Port with time trigger (Message Type 4, Access Type 5). (D)	Message stored in Journal, IDE routes position request to the appropriate DC. (F)	F	Prototype Test Production	No No No	Yes Yes No	External External No	

Table 3.3

Test procedures IDE-3.0

Test	REF	Test procedure	Pass/Fail
IDE-3.0	PS: 10.3.1 to PS: 10.3.4 PS: 10.3.7 to PS: 10.3.11 PS: 12.1 TS1: 2.1.1.1 TS1: 2.1.1.4.1 TS1: 2.1.1.6 TS1: 2.1.1.8 TS1: 3.2.1.1.1 TS1: 3.2.1.1.2 TS1: 3.3.2 TS1: 3.3.3 TS1: 3.3.4 TS3: 2.2.4	IDE receives a SAR SURPIC request from DC1. Communication paths specified in parentheses for each test case. All parameters associated with each message should be valid unless specified otherwise in a given test case.	

Test cases IDE-3.1 to IDE-3.10

Test	REF	Case	Expect results	Test type	Environment	Required before entering	Required during	Certification	Pass/Fail
IDE-3.1	PS: 10.3.1 to PS: 10.3.4 PS: 10.3.7 to PS: 10.3.11 TS1: 2.1.1 TS1: 3.2.1 TS3: 2.1.2 TS3: 2.2.4 TS3: 2.3.1	SAR SURPIC Request (Message Type 6) with invalid Message type parameter. (D)	Message stored in Journal, IDE routes position request to all DCs. (G)	F	Prototype Test Production	No No No	Yes Yes No	External External No	
IDE-3.2	PS: 10.3.1 to PS: 10.3.4 PS: 10.3.7 to PS: 10.3.11 TS1: 2.1.1 TS1: 3.2.1 TS3: 2.1.2 TS3: 2.2.4 TS3: 2.3.1	SAR SURPIC Request (Message Type 6) with invalid Message ID parameter. (D)	Message stored in Journal, IDE routes position request all DCs. (G)	F	Prototype Test Production	No No No	Yes Yes No	External External No	

Test	REF	Case	Expect results	Test type	Environment	Required before entering	Required during	Certification	Pass/Fail
IDE-3.3	PS: 10.3.1 to PS: 10.3.4 PS: 10.3.7 to PS: 10.3.11 TS1: 2.1.1 TS1: 3.2.1 TS3: 2.1.2 TS3: 2.2.4 TS3: 2.3.1	SAR SURPIC Request (Message Type 6) with invalid LRIT Data Requestor parameter. (D)	Message stored in Journal, Receipt Message with Receipt code 7 (C) is sent to the originator and no further action is taken.	F	Prototype Test Production	No No No	Yes Yes No	External External No	
IDE-3.4	PS: 10.3.1 to PS: 10.3.4 PS: 10.3.7 to PS: 10.3.11 TS1: 2.1.1 TS1: 3.2.1 TS3: 2.1.2 TS3: 2.2.4 TS3: 2.3.1 TS3: 2.3.6	SAR SURPIC Request (Message Type 6) with invalid SAR Circular Area parameter. (D)	Message stored in Journal, IDE routes position request all DCs. (G)	F	Prototype Test Production	No No No	Yes Yes No	External External No	

Test	REF	Case	Expect results	Test type	Environment	Required before entering	Required during	Certification	Pass/Fail
IDE-3.5	PS: 10.3.1 to PS: 10.3.4 PS: 10.3.7 to PS: 10.3.11 TS1: 2.1.1 TS1: 3.2.1 TS3: 2.1.2 TS3: 2.2.4 TS3: 2.3.1 TS3: 2.3.6	SAR SURPIC Request (Message Type 6) with invalid Number of Positions parameter. (D)	Message stored in Journal, IDE routes position request all DCs. (G)	F	Prototype Test Production	No No No	Yes Yes No	External External No	
IDE-3.6	PS: 10.3.1 to PS: 10.3.4 PS: 10.3.7 to PS: 10.3.11 TS1: 2.1.1.1 TS1: 2.1.1.4.1 TS1: 2.1.1.6 TS1: 2.1.1.8 TS1: 3.2.1.1.1 TS1: 3.2.1.1.2 TS1: 3.3.2 TS1: 3.3.3 TS1: 3.3.4 TS3: 2.2.4	SAR SURPIC Request (Message Type 6) with invalid Time stamp parameter. (D)	Message stored in Journal, IDE routes position request all DCs. (G)	F	Prototype Test Production	No No No	Yes Yes No	External External No	

Test	REF	Case	Expect results	Test type	Environment	Required before entering	Required during	Certification	Pass/Fail
IDE-3.7	PS: 10.3.1 to PS: 10.3.4 PS: 10.3.7 to PS: 10.3.11 TS1: 2.1.1.1 TS1: 2.1.1.4.1 TS1: 2.1.1.6 TS1: 2.1.1.8 TS1: 3.2.1.1.1 TS1: 3.2.1.1.2 TS1: 3.3.2 TS1: 3.3.3 TS1: 3.3.4 TS3: 2.2.4	SAR SURPIC Request (Message Type 6) with invalid DDP version number parameter. (D)	Message stored in Journal, IDE routes position request all DCs. (G)	F	Prototype Test Production	No No No	Yes Yes No	External External No	
IDE-3.8	PS: 10.3.1 to PS: 10.3.4 PS: 10.3.7 to PS: 10.3.11 TS1: 2.1.1.1 TS1: 2.1.1.4.1 TS1: 2.1.1.6 TS1: 2.1.1.8 TS1: 3.2.1.1.1 TS1: 3.2.1.1.2 TS1: 3.3.2 TS1: 3.3.3 TS1: 3.3.4 TS3: 2.2.4	SAR SURPIC Request (Message Type 6) with invalid Test parameter. (D)	Message stored in Journal, IDE routes position request all DCs. (G)	F	Prototype Test Production	No No No	Yes Yes No	External External No	

Test	REF	Case	Expect results	Test type	Environment	Required before entering	Required during	Certification	Pass/Fail
IDE-3.9	PS: 10.3.1 to PS: 10.3.4 PS: 10.3.7 to PS: 10.3.11 TS1: 2.1.1.1 TS1: 2.1.1.4.1 TS1: 2.1.1.6 TS1: 2.1.1.8 TS1: 3.2.1.1.1 TS1: 3.2.1.1.2 TS1: 3.3.2 TS1: 3.3.3 TS1: 3.3.4 TS3: 2.2.4	SAR SURPIC Request (Message Type 6) with invalid SAR Rectangular Area parameter. (D)	Message stored in Journal, IDE routes position request all DCs. (G)	F	Prototype Test Production	No No No	Yes Yes No	External External No	
IDE-3.10	PS: 10.3.1 to PS: 10.3.4 PS: 10.3.7 to PS: 10.3.11 TS1: 2.1.1.1 TS1: 2.1.1.4.1 TS1: 2.1.1.6 TS1: 2.1.1.8 TS1: 3.2.1.1.1 TS1: 3.2.1.1.2 TS1: 3.3.2 TS1: 3.3.3 TS1: 3.3.4 TS3: 2.2.4	Valid SAR SURPIC Request (Message Type 6). (D)	Message stored in Journal, IDE routes position request all DCs. (G)	F	Prototype Test Production	No No No	Yes Yes Yes	External External External	

Table 3.4

Test procedures IDE-4.0

Test	REF	Test procedure	Pass/Fail
IDE-4.0	PS: 10.3.1 to PS: 10.3.4 PS: 10.3.7 to PS: 10.3.11 PS: 12.1 TS1: 2.1.1.1 TS1: 2.1.1.4.1 TS1: 2.1.1.6 TS1: 2.1.1.8 TS1: 3.2.1.1.1 TS1: 3.2.1.1.2 TS1: 3.3.2 TS1: 3.3.3 TS1: 3.3.4 TS3: 2.2.5	IDE receives a Receipt Message from DC1. Communication paths specified in parentheses for each test case. All parameters associated with each message should be valid unless specified otherwise in a given test case.	

Test cases IDE-4.1 to IDE-4.11

Test	REF	Case	Expect results	Test type	Environment	Required before entering	Required during	Certification	Pass/Fail
IDE-4.1	PS: 10.3.1 to PS: 10.3.4 PS: 10.3.7 to PS: 10.3.11 TS1: 2.1.1.1 TS1: 2.1.1.4.1 TS1: 2.1.1.6 TS1: 2.1.1.8 TS1: 3.2.1.1.1 TS1: 3.2.1.1.2 TS1: 3.3.2 TS1: 3.3.3 TS1: 3.3.4 TS3: 2.2.5	Receipt Message received with an invalid Message type parameter. (D)	Message stored in Journal, IDE routes to appropriate DC. (F)	F	Prototype Test Production	No No No	Yes Yes No	External External No	
IDE-4.2	PS: 10.3.1 to PS: 10.3.4 PS: 10.3.7 to PS: 10.3.11 TS1: 2.1.1.1 TS1: 2.1.1.4.1 TS1: 2.1.1.6 TS1: 2.1.1.8 TS1: 3.2.1.1.1 TS1:3.2.1.1.2 TS1: 3.3.2 TS1: 3.3.3 TS1: 3.3.4 TS3: 2.2.5	Receipt Message received with an invalid message ID parameter. (D)	Message stored in journal, IDE routes message to appropriate DC. (F)	F	Prototype Test Production	No No No	Yes Yes No	External External No	

Test	REF	Case	Expect results	Test type	Environment	Required before entering	Required during	Certification	Pass/Fail
IDE-4.3	PS: 10.3.1 to PS: 10.3.4 PS: 10.3.7 to PS: 10.3.11 TS1: 2.1.1.1 TS1: 2.1.1.4.1 TS1: 2.1.1.6 TS1: 2.1.1.8 TS1: 3.2.1.1.1 TS1: 3.2.1.1.2 TS1: 3.3.2 TS1: 3.3.3 TS1: 3.3.4 TS3: 2.2.5	Receipt Message received with an invalid reference ID parameter. (D)	Message stored in journal, IDE routes message to appropriate DC. (F)	F	Prototype Test Production	No No No	Yes Yes No	External External No	
IDE-4.4	PS: 10.3.1 to PS: 10.3.4 PS: 10.3.7 to PS: 10.3.11 TS1: 2.1.1.1 TS1: 2.1.1.4.1 TS1: 2.1.1.6 TS1: 2.1.1.8 TS1: 3.2.1.1.1 TS1: 3.2.1.1.2 TS1: 3.3.2 TS1: 3.3.3 TS1: 3.3.4 TS3: 2.2.5	Receipt Message received with an invalid Receipt Code parameter. (D)	Message stored in journal, IDE routes message to appropriate DC. (F)	F	Prototype Test Production	No No No	Yes Yes No	External External No	

Test	REF	Case	Expect results	Test type	Environment	Required before entering	Required during	Certification	Pass/Fail
IDE-4.5	PS: 10.3.1 to PS: 10.3.4 PS: 10.3.7 to PS: 10.3.11 TS1: 2.1.1.1 TS1: 2.1.1.4.1 TS1: 2.1.1.6 TS1: 2.1.1.8 TS1: 3.2.1.1.1 TS1: 3.2.1.1.2 TS1: 3.3.2 TS1: 3.3.3 TS1: 3.3.4 TS3: 2.2.5	Receipt Message received with an invalid Destination parameter. (D)	Message stored in Journal, Receipt Message with Receipt code 7 (C) is sent to the originator and no further action is taken.	F	Prototype Test Production	No No No	Yes Yes No	External External No	
IDE-4.6	PS: 10.3.1 to PS: 10.3.4 PS: 10.3.7 to PS: 10.3.11 TS1: 2.1.1.1 TS1: 2.1.1.4.1 TS1: 2.1.1.6 TS1: 2.1.1.8 TS1: 3.2.1.1.1 TS1: 3.2.1.1.2 TS1: 3.3.2 TS1: 3.3.3 TS1: 3.3.4 TS3: 2.2.5	Receipt Message received with an invalid Originator parameter. (D)	Message stored in Journal, Receipt Message with Receipt code 7 (C) is sent to the originating DC as identified in the PKI certificate and no further action is taken.	F	Prototype Test Production	No No No	Yes Yes No	External External No	

Test	REF	Case	Expect results	Test type	Environment	Required before entering	Required during	Certification	Pass/Fail
IDE-4.7	PS: 10.3.1 to PS: 10.3.4 PS: 10.3.7 to PS: 10.3.11 TS1: 2.1.1.1 TS1: 2.1.1.4.1 TS1: 2.1.1.6 TS1: 2.1.1.8 TS1: 3.2.1.1.1 TS1: 3.2.1.1.2 TS1: 3.3.2 TS1: 3.3.3 TS1: 3.3.4 TS3: 2.2.5	Receipt Message received with the LRIT ID in the Originator parameter not correlating with the LRIT ID in the certificate. (D)	Message stored in Journal, Receipt Message with Receipt code 7 (C) is sent to the originator and no further action is taken.	F	Prototype Test Production	No No No	Yes Yes No	External External No	
IDE-4.8	PS: 10.3.1 to PS: 10.3.4 PS: 10.3.7 to PS: 10.3.11 TS1: 2.1.1.1 TS1: 2.1.1.4.1 TS1: 2.1.1.6 TS1: 2.1.1.8 TS1: 3.2.1.1.1 TS1: 3.2.1.1.2 TS1: 3.3.2 TS1: 3.3.3 TS1: 3.3.4 TS3: 2.2.5	Receipt Message received with invalid Message Text. (D)	Message stored in Journal, IDE routes message to appropriate DC. (F)	F	Prototype Test Production	No No No	Yes Yes No	External External No	

Test	REF	Case	Expect results	Test type	Environment	Required before entering	Required during	Certification	Pass/Fail
IDE-4.9	PS: 10.3.1 to PS: 10.3.4 PS: 10.3.7 to PS: 10.3.11 TS1: 2.1.1.1 TS1: 2.1.1.4.1 TS1: 2.1.1.6 TS1: 2.1.1.8 TS1: 3.2.1.1.1 TS1: 3.2.1.1.2 TS1: 3.3.2 TS1: 3.3.3 TS1: 3.3.4 TS3: 2.2.5	Receipt Message received with an invalid Time stamp parameter. (D)	Message stored in Journal, IDE routes message to appropriate DC. (F)	F	Prototype Test Production	No No No	Yes Yes No	External External No	
IDE-4.10	PS: 10.3.1 to PS: 10.3.4 PS: 10.3.7 to PS: 10.3.11 TS1: 2.1.1.1 TS1: 2.1.1.4.1 TS1: 2.1.1.6 TS1: 2.1.1.8 TS1: 3.2.1.1.1 TS1: 3.2.1.1.2 TS1: 3.3.2 TS1: 3.3.3 TS1: 3.3.4 TS3: 2.2.5	Receipt Message received with an invalid DDP version number parameter. (D)	Message stored in Journal, Receipt Message with Receipt code 9 (C) is sent to the originator and no further action is taken.	F	Prototype Test Production	No No No	Yes Yes No	External External No	

Test	REF	Case	Expect results	Test type	Environment	Required before entering	Required during	Certification	Pass/Fail
IDE-4.11	PS: 10.3.1 to PS: 10.3.4 PS: 10.3.7 to PS: 10.3.11 TS1: 2.1.1.1 TS1: 2.1.1.4.1 TS1: 2.1.1.6 TS1: 2.1.1.8 TS1: 3.2.1.1.1 TS1: 3.2.1.1.2 TS1: 3.3.2 TS1: 3.3.3 TS1: 3.3.4 TS3: 2.2.5	Receipt Message received with an invalid Test parameter. (D)	Message stored in Journal, IDE routes message to appropriate DC. (F)	F	Prototype Test Production	No No No	Yes Yes No	External External No	

Table 3.5

Test procedures IDE-5.0

Test	REF	Test procedure	Pass/Fail
IDE-5.0	PS: 10.3.1 to PS: 10.3.4 PS: 10.3.7 to PS: 10.3.11 PS: 10.3.14 TS1: 2.1.1.1 TS1: 2.1.1.4.1 TS1: 2.1.1.6 TS1: 2.1.1.8 TS1: 3.2.1.1.1 TS1: 3.2.1.1.2 TS1: 3.3.2 TS1: 3.3.3 TS1: 3.3.5 TS3: 2.2.6	IDE receives a DDP Notification Message from the DDP server. Communication paths specified in parentheses for each test case. All parameters associated with each message should be valid unless specified otherwise in a given test case.	

Test cases IDE-5.1 to IDE-5.7

Test	REF	Case	Expect results	Test type	Environment	Required before entering	Required during	Certification	Pass/Fail
IDE-5.1	PS: 10.3.14 TS1: 2.1.1.1 TS1: 2.1.1.4.1 TS1: 2.1.1.6 TS1: 2.1.1.8 TS1: 3.2.1.1.1 TS1: 3.2.1.1.2 TS1: 3.3.2 TS1: 3.3.3 TS1: 3.3.5 TS3: 2.2.6	DDP Notification Message received with an invalid Message type parameter. (A)	Message stored in Journal, Receipt Message with Receipt code 7 (B) is sent to the originator and no further action is taken.	F	Prototype Test Production	No No No	Yes Yes No	External External No	
IDE-5.2	PS: 10.3.14 TS1: 2.1.1.1 TS1: 2.1.1.4.1 TS1: 2.1.1.6 TS1: 2.1.1.8 TS1: 3.2.1.1.1 TS1: 3.2.1.1.2 TS1: 3.3.2 TS1: 3.3.3 TS1: 3.3.5 TS3: 2.2.6	DDP Notification Message received with an invalid Message ID parameter. (A)	Message stored in Journal, Receipt Message with Receipt code 7 (B) is sent to the originator and no further action is taken.	F	Prototype Test Production	No No No	Yes Yes No	External External No	

Test	REF	Case	Expect results	Test type	Environment	Required before entering	Required during	Certification	Pass/Fail
IDE-5.3	PS: 10.3.14 TS1: 2.1.1.1 TS1: 2.1.1.4.1 TS1: 2.1.1.6 TS1: 2.1.1.8 TS1: 3.2.1.1.1 TS1: 3.2.1.1.2 TS1: 3.3.2 TS1: 3.3.3 TS1: 3.3.5 TS3: 2.2.6	DDP Notification Message received with an invalid Message parameter. (A)	Message stored in Journal, Receipt Message with Receipt code 7 (B) is sent to the originator and no further action is taken.	F	Prototype Test Production	No No No	Yes Yes No	External External No	
IDE-5.4	PS: 10.3.14 TS1: 2.1.1.1 TS1: 2.1.1.4.1 TS1: 2.1.1.6 TS1: 2.1.1.8 TS1: 3.2.1.1.1 TS1: 3.2.1.1.2 TS1: 3.3.2 TS1: 3.3.3 TS1: 3.3.5 TS3: 2.2.6	DDP Notification Message received with an invalid Time stamp parameter. (A)	Message stored in Journal, Receipt Message with Receipt code 7 (B) is sent to the originator and no further action is taken.	F	Prototype Test Production	No No No	Yes Yes No	External External No	

Test	REF	Case	Expect results	Test type	Environment	Required before entering	Required during	Certification	Pass/Fail
IDE-5.5	PS: 10.3.14 TS1: 2.1.1.1 TS1: 2.1.1.4.1 TS1: 2.1.1.6 TS1: 2.1.1.8 TS1: 3.2.1.1.1 TS1: 3.2.1.1.2 TS1: 3.3.2 TS1: 3.3.3 TS1: 3.3.5 TS3: 2.2.6	DDP Notification Message received with an invalid DDP version number parameter (XML schema validation only). (A)	Message stored in Journal, Receipt Message with Receipt code 9 (B) is sent to the originator and no further action is taken.	F	Prototype Test Production	No No No	Yes Yes No	External External No	
IDE-5.6	PS: 10.3.14 TS1: 2.1.1.1 TS1: 2.1.1.4.1 TS1: 2.1.1.6 TS1: 2.1.1.8 TS1: 3.2.1.1.1 TS1: 3.2.1.1.2 TS1: 3.3.2 TS1: 3.3.3 TS1: 3.3.5 TS3: 2.2.6	DDP Notification Message received with an invalid Test parameter. (A)	Message stored in Journal, Receipt Message with Receipt code 7 (B) is sent to the originator and no further action is taken.	F	Prototype Test Production	No No No	Yes Yes No	External External No	

Test	REF	Case	Expect results	Test type	Environment	Required before entering	Required during	Certification	Pass/Fail
IDE-5.7	PS: 10.3.1 to PS: 10.3.4 PS: 10.3.7 to PS: 10.3.11 PS: 10.3.14 TS1: 2.1.1.1 TS1: 2.1.1.4.1 TS1: 2.1.1.6 TS1: 2.1.1.8 TS1: 3.2.1.1.1 TS1: 3.2.1.1.2 TS1: 3.3.2 TS1: 3.3.3 TS1: 3.3.5 TS3: 2.2.6	DDP Notification Message received with all valid parameter. (A)	DDP notification will be broadcast to all DCs. A DDP Request will be sent to the DDP server. All messages will be stored in Journal.	F	Prototype Test Production	No No No	Yes Yes No	External External No	

Table 3.6

Test procedures IDE-6.0

Test	REF	Test procedure	Pass/Fail
IDE-6.0	PS: 10.3.1 PS: 10.3.14 TS1: 2.1.1.1 TS1: 2.1.1.4.1 TS1: 2.1.1.6 TS1: 2.1.1.8 TS1: 3.2.1.1.1 TS1: 3.2.1.1.2 TS1: 3.3.2 TS1: 3.3.3 TS1: 3.3.5 TS3: 2.2	IDE receives a DDP Update message from the DDP server. Communication paths specified in parentheses for each test case. All parameters associated with each message should be valid unless specified otherwise in a given test case.	

Test cases IDE-6.1 to IDE-6.11

Test	REF	Case	Expect results	Test type	Environment	Required before entering	Required during	Certification	Pass/Fail
IDE-6.1	PS: 10.3.14 TS1: 2.1.1.1 TS1: 2.1.1.4.1 TS1: 2.1.1.6 TS1: 2.1.1.8 TS1: 3.2.1.1.1 TS1: 3.2.1.1.2 TS1: 3.3.2 TS1: 3.3.3 TS1: 3.3.5 TS3: 2.2.8	IDE receives a DDP Update Message with an invalid Message type parameter. (A)	Message stored in Journal, Receipt Message with Receipt code 7 (B) sent to DDP server and no further action is taken.	F	Prototype Test Production	No No No	Yes Yes No	External External No	
IDE-6.2	PS: 10.3.14 TS1: 2.1.1.1 TS1: 2.1.1.4.1 TS1: 2.1.1.6 TS1: 2.1.1.8 TS1: 3.2.1.1.1 TS1: 3.2.1.1.2 TS1: 3.3.2 TS1: 3.3.3 TS1: 3.3.5 TS3: 2.2.8	IDE receives a DDP Update Message with an invalid Message ID parameter. (A)	Message stored in Journal, Receipt Message with Receipt code 7 (B) sent to DDP server and no further action is taken.	F	Prototype Test Production	No No No	Yes Yes No	External External No	

Test	REF	Case	Expect results	Test type	Environment	Required before entering	Required during	Certification	Pass/Fail
IDE-6.3	PS: 10.3.14 TS1: 2.1.1.1 TS1: 2.1.1.4.1 TS1: 2.1.1.6 TS1: 2.1.1.8 TS1: 3.2.1.1.1 TS1: 3.2.1.1.2 TS1: 3.3.2 TS1: 3.3.3 TS1: 3.3.5 TS3: 2.2.8	IDE receives a DDP Update Message with an invalid Message parameter. (A)	Message stored in Journal, Receipt Message with Receipt code 7 (B) sent to DDP server and no further action is taken.	F	Prototype Test Production	No No No	Yes Yes No	External External No	
IDE-6.4	PS: 10.3.14 TS1: 2.1.1.1 TS1: 2.1.1.4.1 TS1: 2.1.1.6 TS1: 2.1.1.8 TS1: 3.2.1.1.1 TS1: 3.2.1.1.2 TS1: 3.3.2 TS1: 3.3.3 TS1: 3.3.5 TS3: 2.2.8	IDE receives a DDP Update Message with an invalid Time stamp parameter. (A)	Message stored in Journal, Receipt Message with Receipt code 7 (B) sent to DDP server and no further action is taken.	F	Prototype Test Production	No No No	Yes Yes No	External External No	

Test	REF	Case	Expect results	Test type	Environment	Required before entering	Required during	Certification	Pass/Fail
IDE-6.5	PS: 10.3.14 TS1: 2.1.1.1 TS1: 2.1.1.4.1 TS1: 2.1.1.6 TS1: 2.1.1.8 TS1: 3.2.1.1.1 TS1: 3.2.1.1.2 TS1: 3.3.2 TS1: 3.3.3 TS1: 3.3.5 TS3: 2.2.8	IDE receives a DDP Update Message with an invalid DDP version number parameter (XML Schema validation only). (A)	Message stored in Journal, Receipt Message with Receipt code 9 (B) sent to DDP server and no further action is taken.	F	Prototype Test Production	No No No	Yes Yes No	External External No	
IDE-6.6	PS: 10.3.14 TS1: 2.1.1.1 TS1: 2.1.1.4.1 TS1: 2.1.1.6 TS1: 2.1.1.8 TS1: 3.2.1.1.1 TS1: 3.2.1.1.2 TS1: 3.3.2 TS1: 3.3.3 TS1: 3.3.5 TS3: 2.2.8	IDE receives a DDP Update Message with an invalid file parameter. (A)	Message stored in Journal, Receipt Message with Receipt code 7 (B) sent to DDP server and no further action is taken.	F	Prototype Test Production	No No No	Yes Yes No	External External No	

Test	REF	Case	Expect results	Test type	Environment	Required before entering	Required during	Certification	Pass/Fail
IDE-6.7	PS: 10.3.14 TS1: 2.1.1.1 TS1: 2.1.1.4.1 TS1: 2.1.1.6 TS1: 2.1.1.8 TS1: 3.2.1.1.1 TS1: 3.2.1.1.2 TS1: 3.3.2 TS1: 3.3.3 TS1: 3.3.5 TS3: 2.2.8	IDE receives a DDP Update Message with an invalid Test parameter. (A)	Message stored in Journal, Receipt Message with Receipt code 7 (B) sent to DDP server and no further action is taken.	F	Prototype Test Production	No No No	Yes Yes No	External External No	
IDE-6.8	PS: 10.3.1 PS: 10.3.14 TS1: 2.1.1.1 TS1: 2.1.1.4.1 TS1: 2.1.1.6 TS1: 2.1.1.8 TS1: 3.2.1.1.1 TS1: 3.2.1.1.2 TS1: 3.3.2 TS1: 3.3.3 TS1: 3.3.5 TS3: 2.2.8	IDE receives a DDP Update Message for a full DDP (DDP Update Type 3) with all valid parameter. (A)	The following results occur: - Message stored in Journal. - Routing tables are updated. - Update system DDP version (IDE local copy).	F	Prototype Test Production	No No No	Yes Yes No	External External No	

Test	REF	Case	Expect results	Test type	Environment	Required before entering	Required during	Certification	Pass/Fail
IDE-6.9	PS: 10.3.1 PS: 10.3.14 TS1: 2.1.1.1 TS1: 2.1.1.4.1 TS1: 2.1.1.6 TS1: 2.1.1.8 TS1: 3.2.1.1.1 TS1: 3.2.1.1.2 TS1: 3.3.2 TS1: 3.3.3 TS1: 3.3.5 TS3: 2.2.8	IDE receives a DDP Update Message for an incremental, regular DDP (DDP Update Type 0) with all valid parameter. (A)	The following results occur immediately: - Message stored in Journal. The following results occur at implementation time: - Routing tables are updated based - Update system DDP version (IDE local copy).	F	Prototype Test Production	No No No	Yes Yes No	External External No	
IDE-6.10	PS: 10.3.1 PS: 10.3.14 TS1: 2.1.1.1 TS1: 2.1.1.4.1 TS1: 2.1.1.6 TS1: 2.1.1.8 TS1: 3.2.1.1.1 TS1: 3.2.1.1.2 TS1: 3.3.2 TS1: 3.3.3 TS1: 3.3.5 TS3: 2.2.8	IDE receives a DDP Update Message for an incremental immediate DDP (DDP Update Type 1) with all valid parameter. (A)	The following results occur immediately: - Message stored in Journal. The following results occur at implementation time: - Routing tables are updated based - Update system DDP version (IDE local copy).	F	Prototype Test Production	No No No	Yes Yes No	External External No	

Test	REF	Case	Expect results	Test type	Environment	Required before entering	Required during	Certification	Pass/Fail
IDE-6.11	PS: 10.3.1 PS: 10.3.14 TS1: 2.1.1.1 TS1: 2.1.1.4.1 TS1: 2.1.1.6 TS1: 2.1.1.8 TS1: 3.2.1.1.1 TS1: 3.2.1.1.2 TS1: 3.3.2 TS1: 3.3.3 TS1: 3.3.5 TS3: 2.2.8	IDE receives a DDP Update Message for an incremental all DDP (DDP Update Type 2) with all valid parameter. (A)	The following results occur immediately: - Message stored in Journal. The following results occur at implementation time: - Routeing tables are updated [based] - Update system DDP version (IDE local copy).	F	Prototype Test Production	No No No	Yes Yes No	External External No	

Table 3.7

Test procedures IDE-7.0

Test	REF	Test procedure	Pass/Fail
IDE-7.0	PS: 10.3.1 to PS: 10.3.4 PS: 10.3.7 to PS: 10.3.11 PS: 10.3.14 TS3: 2.2.9	IDE receives a System status message. Communication paths specified in parentheses for each test case. All parameters associated with each message should be valid unless specified otherwise in a given test case.	

Test cases IDE-7.1 to IDE-7.3

Test	REF	Case	Expect results	Test type	Environment	Required before entering	Required during	Certification	Pass/Fail
IDE-7.1	PS: 10.3.1 to PS: 10.3.4 PS: 10.3.7 to PS: 10.3.11 PS: 10.3.14 TS3: 2.2.9	IDE receives a System Status Message with an invalid Originator parameter. (A and D)	Message stored in Journal, Receipt Message with Receipt code 7 (B and C) is sent to the originator as identified in the PKI certificate and no further action is taken.	F	Prototype Test Production	No No No	Yes Yes No	External External No	

Test	REF	Case	Expect results	Test type	Environment	Required before entering	Required during	Certification	Pass/Fail
IDE-7.2	PS: 10.3.1 to PS: 10.3.4 PS: 10.3.7 to PS: 10.3.11 PS: 10.3.14 TS3: 2.2.9	IDE receives a System Status Message with an invalid Test parameter. (A and D)	Message stored in Journal, Receipt Message with Receipt code 7 (B and C) is sent to the originator and no further action is taken.	F	Prototype Test Production	No No No	Yes Yes No	External External No	
IDE-7.3	PS: 10.3.1 to PS: 10.3.4 PS: 10.3.7 to PS: 10.3.11 PS: 10.3.14 TS3: 2.2.9	IDE receives a System Status Message with all valid parameters. (A and D)	The following results occur: - Message stored in Journal. - Database updated. - Admin interface reflects change in status.	F	Prototype Test Production	No No No	Yes Yes Yes	Internal External Internal	

Table 3.8

Test procedures IDE-8.0

Test	REF	Test procedure	Pass/Fail
IDE-8.0	PS: 10.3.1 to PS: 10.3.4 PS: 10.3.7 to PS: 10.3.11 PS: 10.3.6 TS3: 2.2.11 TS3: 2.2.13	IDE receives a LRIT Journal message. Communication paths specified in parentheses for each test case. All parameters associated with each message should be valid unless specified otherwise in a given test case.	

Test cases IDE-8.1 to IDE-8.9

Test	REF	Case	Expect results	Test type	Environment	Required before entering	Required during	Certification	Pass/Fail
IDE-8.1	PS: 10.3.1 to PS: 10.3.4 PS: 10.3.7 to PS: 10.3.11 PS: 10.3.6 TS3: 2.2.11 TS3: 2.2.13	LRIT Journal Message with an invalid Message type. (D)	Message stored in Journal, Receipt Message with Receipt code 7 (C) is sent to the originator and no further action is taken.	F	Prototype Test Production	No No No	Yes Yes No	External External No	
IDE-8.2	PS: 10.3.1 to PS: 10.3.4 PS: 10.3.7 to PS: 10.3.11 PS: 10.3.6 TS3: 2.2.11 TS3: 2.2.13	LRIT Journal Message with an invalid Message ID. (D)	Message stored in Journal, Receipt Message with Receipt code 7 (C) is sent to the originator and no further action is taken.	F	Prototype Test Production	No No No	Yes Yes No	External External No	

Test	REF	Case	Expect results	Test type	Environment	Required before entering	Required during	Certification	Pass/Fail
IDE-8.3	PS: 10.3.1 to PS: 10.3.4 PS: 10.3.7 to PS: 10.3.11 PS: 10.3.6 TS3: 2.2.11 TS3: 2.2.13	LRIT Journal Message with an invalid Message. (D)	Message stored in Journal, Receipt Message with Receipt code 7 (C) is sent to the originator and no further action is taken.	F	Prototype Test Production	No No No	Yes Yes No	External External No	
IDE-8.4	PS: 10.3.1 to PS: 10.3.4 PS: 10.3.7 to PS: 10.3.11 PS: 10.3.6 TS3: 2.2.11 TS3: 2.2.13	LRIT Journal Message with an invalid Time stamp. (D)	Message stored in Journal, Receipt Message with Receipt code 7 (C) is sent to the originator and no further action is taken.	F	Prototype Test Production	No No No	Yes Yes No	External External No	
IDE-8.5	PS: 10.3.1 to PS: 10.3.4 PS: 10.3.7 to PS: 10.3.11 PS: 10.3.6 TS3: 2.2.11 TS3: 2.2.13	LRIT Journal Message with an invalid Originator. (D)	Message stored in Journal, Receipt Message with Receipt code 7 (C) is sent to the originating DC as identified in the PKI certificate and no further action is taken.	F	Prototype Test Production	No No No	Yes Yes No	External External No	
IDE-8.6	PS: 10.3.1 to PS: 10.3.4 PS: 10.3.7 to PS: 10.3.11 PS: 10.3.6 TS3: 2.2.11 TS3: 2.2.13	LRIT Journal Message with an invalid Journal file. (D)	Message stored in Journal, Receipt Message with Receipt code 7 (C) is sent to the originator and no further action is taken.	F	Prototype Test Production	No No No	Yes Yes No	External External No	

Test	REF	Case	Expect results	Test type	Environment	Required before entering	Required during	Certification	Pass/Fail
IDE-8.7	PS: 10.3.1 to PS: 10.3.4 PS: 10.3.7 to PS: 10.3.11 PS: 10.3.6 TS3: 2.2.11 TS3: 2.2.13	LRIT Journal Message with an invalid DDP version number parameter. (D)	Message stored in Journal, Receipt Message with Receipt code 9 (C) is sent to the originator and no further action is taken.	F	Prototype Test Production	No No No	Yes Yes No	External External No	
IDE-8.8	PS: 10.3.1 to PS: 10.3.4 PS: 10.3.7 to PS: 10.3.11 PS: 10.3.6 TS3: 2.2.11 TS3: 2.2.13	LRIT Journal Message with an invalid Test parameter. (D)	Message stored in Journal, Receipt Message with Receipt code 7 (C) is sent to the originator and no further action is taken.	F	Prototype Test Production	No No No	Yes Yes No	External External No	
IDE-8.9	PS: 10.3.1 to PS: 10.3.4 PS: 10.3.7 to PS: 10.3.11 PS: 10.3.6 TS3: 2.2.11 TS3: 2.2.13	Valid LRIT Journal Message. (D)	Message header stored in Journal and message file is processed (included into IDE own journal).	F	Prototype Test Production	No No No	Yes Yes No	Internal External No	

Table 3.9

Test procedures IDE-9.0

Test	REF	Test procedure	Pass/Fail
IDE-9.0	PS: 10.3.1 to PS: 10.3.4 PS: 10.3.7 to PS: 10.3.11 PS: 10.3.15 TS1: 3.2 TS1: 3.3.1 TS1: 3.3.2 TS1: 3.3.3 TS1: 3.3.8 TS1: 3.9 TS3: 2.1 TS3: 2.2.1 TS3: 2.2.12 TS3: 2.3.11	IDE receives a Pricing Request message. Communication paths specified in parentheses for each test case. All parameters associated with each message should be valid unless specified otherwise in a given test case.	

Test cases IDE-9.1 to IDE-9.7

Test	REF	Case	Expect results	Test type	Environment	Required before entering	Required during	Certification	Pass/Fail
IDE-9.1	PS: 10.3.1 to PS: 10.3.4 PS: 10.3.7 to PS: 10.3.11 PS: 10.3.15 TS1: 3.2 TS1: 3.3.1 TS1: 3.3.2 TS1: 3.3.3 TS1: 3.3.8 TS1: 3.9 TS3: 2.1 TS3: 2.2.1 TS3: 2.2.12 TS3: 2.3.11	Pricing Request Message with an invalid Message type parameter. (D)	Message stored in Journal, Receipt Message with Receipt code 7 (C) is sent to the originator and no further action is taken.	F	Prototype Test Production	No No No	Yes Yes No	External External No	
IDE-9.2	PS: 10.3.1 to PS: 10.3.4 PS: 10.3.7 to PS: 10.3.11 PS: 10.3.15 TS1: 3.2 TS1: 3.3.1 TS1: 3.3.2 TS1: 3.3.3 TS1: 3.3.8 TS1: 3.9 TS3: 2.1 TS3: 2.2.1 TS3: 2.2.12 TS3: 2.3.11	Pricing Request Message with an invalid Message ID parameter. (D)	Message stored in Journal, Receipt Message with Receipt code 7 (C) is sent to the originator and no further action is taken.	F	Prototype Test Production	No No No	Yes Yes No	External External No	

Test	REF	Case	Expect results	Test type	Environment	Required before entering	Required during	Certification	Pass/Fail
IDE-9.3	PS: 10.3.1 to PS: 10.3.4 PS: 10.3.7 to PS: 10.3.11 PS: 10.3.15 TS1: 3.2 TS1: 3.3.1 TS1: 3.3.2 TS1: 3.3.3 TS1: 3.3.8 TS1: 3.9 TS3: 2.1 TS3: 2.2.1 TS3: 2.2.12 TS3: 2.3.11	Pricing Request Message with an invalid Originator parameter. (D)	Message stored in Journal, Receipt Message with Receipt code 7 (C) is sent to the originating DC as identified in the PKI certificate and no further action is taken.	F	Prototype Test Production	No No No	Yes Yes No	ExternalN/A External No	
IDE-9.4	PS: 10.3.1 to PS: 10.3.4 PS: 10.3.7 to PS: 10.3.11 PS: 10.3.15 TS1: 3.2 TS1: 3.3.1 TS1: 3.3.2 TS1: 3.3.3 TS1: 3.3.8 TS1: 3.9 TS3: 2.1 TS3: 2.2.1 TS3: 2.2.12 TS3: 2.3.11	Pricing Request Message with an invalid Time stamp parameter. (D)	Message stored in Journal, Receipt Message with Receipt code 7 (C) is sent to the originator and no further action is taken.	F	Prototype Test Production	No No No	Yes Yes No	External External No	

Test	REF	Case	Expect results	Test type	Environment	Required before entering	Required during	Certification	Pass/Fail
IDE-9.5	PS: 10.3.1 to PS: 10.3.4 PS: 10.3.7 to PS: 10.3.11 PS: 10.3.15 TS1: 3.2 TS1: 3.3.1 TS1: 3.3.2 TS1: 3.3.3 TS1: 3.3.8 TS1: 3.9 TS3: 2.1 TS3: 2.2.1 TS3: 2.2.12 TS3: 2.3.11	Pricing Request Message with an invalid DDP version number parameter. (D)	Message stored in Journal, Receipt Message with Receipt code 9 (C) is sent to the originator and no further action is taken.	F	Prototype Test Production	No No No	Yes Yes No	External External No	
IDE-9.6	PS: 10.3.1 to PS: 10.3.4 PS: 10.3.7 to PS: 10.3.11 PS: 10.3.15 TS1: 3.2 TS1: 3.3.1 TS1: 3.3.2 TS1: 3.3.3 TS1: 3.3.8 TS1: 3.9 TS3: 2.1 TS3: 2.2.1 TS3: 2.2.12 TS3: 2.3.11	Pricing Request Message with an invalid Test parameter. (D)	Message stored in Journal, Receipt Message with Receipt code 7 (C) is sent to the originator and no further action is taken.	F	Prototype Test Production	No No No	Yes Yes No	External External No	

Test	REF	Case	Expect results	Test type	Environment	Required before entering	Required during	Certification	Pass/Fail
IDE-9.7	PS: 10.3.1 to PS: 10.3.4 PS: 10.3.7 to PS: 10.3.11 PS: 10.3.15 TS1: 3.2 TS1: 3.3.1 TS1: 3.3.2 TS1: 3.3.3 TS1: 3.3.8 TS1: 3.9 TS3: 2.1 TS3: 2.2.1 TS3: 2.2.12 TS3: 2.3.11	Valid Pricing Request Message. (D)	Message stored in Journal, pricing update message (message type 15) is sent to the requestor. (C)	F	Prototype Test Production	No No No	Yes Yes No	External External No	

Table 3.10

Test procedures IDE-10.0

Test	REF	Test procedure	Pass/Fail
IDE-10.0	PS: 10.3.1 to PS: 10.3.4 PS: 10.3.7 to PS: 10.3.11 PS: 10.3.15 TS1: 3.2 TS1: 3.3.1 TS1: 3.3.2 TS1: 3.3.3 TS1: 3.3.8 TS1: 3.9 TS3: 2.1 TS3: 2.2.1 TS3: 2.2.13 TS3: 2.3.11	IDE receives a Pricing Update Message. Communication paths specified in parentheses for each test case. All parameters associated with each message should be valid unless specified otherwise in a given test case.	

Test cases IDE-10.1 to IDE-10.11

Test	REF	Case	Expect results	Test type	Environment	Required before entering	Required during	Certification	Pass/Fail
IDE-10.1	PS: 10.3.1 to PS: 10.3.4 PS: 10.3.7 to PS: 10.3.11 PS: 10.3.15 TS1: 3.2 TS1: 3.3.1 TS1: 3.3.2 TS1: 3.3.3 TS1: 3.3.8 TS1: 3.9 TS3: 2.1 TS3: 2.2.1 TS3: 2.2.13 TS3: 2.3.11	Pricing Update Message with an invalid Message type parameter. (D)	Message stored in Journal, Receipt Message with Receipt code 7 (C) is sent to the originator and no further action is taken.	F	Prototype Test Production	No No No	Yes Yes No	External External No	
IDE-10.2	PS: 10.3.1 to PS: 10.3.4 PS: 10.3.7 to PS: 10.3.11 PS: 10.3.15 TS1: 3.2 TS1: 3.3.1 TS1: 3.3.2 TS1: 3.3.3 TS1: 3.3.8 TS1: 3.9 TS3: 2.1 TS3: 2.2.1 TS3: 2.2.13 TS3: 2.3.11	Pricing Update Message with an invalid Message ID parameter. (D)	Message stored in Journal, Receipt Message with Receipt code 7 (C) is sent to the originator and no further action is taken.	F	Prototype Test Production	No No No	Yes Yes No	External External No	

Test	REF	Case	Expect results	Test type	Environment	Required before entering	Required during	Certification	Pass/Fail
IDE-10.3	PS: 10.3.1 to PS: 10.3.4 PS: 10.3.7 to PS: 10.3.11 PS: 10.3.15 TS1: 3.2 TS1: 3.3.1 TS1: 3.3.2 TS1: 3.3.3 TS1: 3.3.8 TS1: 3.9 TS3: 2.1 TS3: 2.2.1 TS3: 2.2.13 TS3: 2.3.11	Pricing Update Message with an invalid Message parameter. (D)	Message stored in Journal, Receipt Message with Receipt code 7 (C) is sent to the originator and no further action is taken.	F	Prototype Test Production	No No No	Yes Yes No	External External No	
IDE-10.4	PS: 10.3.1 to PS: 10.3.4 PS: 10.3.7 to PS: 10.3.11 PS: 10.3.15 TS1: 3.2 TS1: 3.3.1 TS1: 3.3.2 TS1: 3.3.3 TS1: 3.3.8 TS1: 3.9 TS3: 2.1 TS3: 2.2.1 TS3: 2.2.13 TS3: 2.3.11	Pricing Update Message with an invalid Time stamp parameter. (D)	Message stored in Journal, Receipt Message with Receipt code 7 (C) is sent to the originator and no further action is taken.	F	Prototype Test Production	No No No	Yes Yes No	External External No	

Test	REF	Case	Expect results	Test type	Environment	Required before entering	Required during	Certification	Pass/Fail
IDE-10.5	PS: 10.3.1 to PS: 10.3.4 PS: 10.3.7 to PS: 10.3.11 PS: 10.3.15 TS1: 3.2 TS1: 3.3.1 TS1: 3.3.2 TS1: 3.3.3 TS1: 3.3.8 TS1: 3.9 TS3: 2.1 TS3: 2.2.1 TS3: 2.2.13 TS3: 2.3.11	Pricing Update Message with an invalid DDP version number parameter. (D)	Message stored in Journal, Receipt Message with Receipt code 9 (C) is sent to the originator and no further action is taken.	F	Prototype Test Production	No No No	Yes Yes No	External External No	
IDE-10.6	PS: 10.3.1 to PS: 10.3.4 PS: 10.3.7 to PS: 10.3.11 PS: 10.3.15 TS1: 3.2 TS1: 3.3.1 TS1: 3.3.2 TS1: 3.3.3 TS1: 3.3.8 TS1: 3.9 TS3: 2.1 TS3: 2.2.1 TS3: 2.2.13 TS3: 2.3.11	Pricing Update Message with an invalid Effective Date parameter. (D)	Message stored in Journal, Receipt Message with Receipt code 7 (C) is sent to the originator and no further action is taken.	F	Prototype Test Production	No No No	Yes Yes No	External External No	

Test	REF	Case	Expect results	Test type	Environment	Required before entering	Required during	Certification	Pass/Fail
IDE-10.7	PS: 10.3.1 to PS: 10.3.4 PS: 10.3.7 to PS: 10.3.11 PS: 10.3.15 TS1: 3.2 TS1: 3.3.1 TS1: 3.3.2 TS1: 3.3.3 TS1: 3.3.8 TS1: 3.9 TS3: 2.1 TS3: 2.2.1 TS3: 2.2.13 TS3: 2.3.11	Pricing Update Message with an Effective Date that is before the current date. (D)	Message stored in Journal, Receipt Message with Receipt code 7 (C) is sent to the originator and no further action is taken.	F	Prototype Test Production	No No No	Yes Yes No	External External No	
IDE-10.8	PS: 10.3.1 to PS: 10.3.4 PS: 10.3.7 to PS: 10.3.11 PS: 10.3.15 TS1: 3.2 TS1: 3.3.1 TS1: 3.3.2 TS1: 3.3.3 TS1: 3.3.8 TS1: 3.9 TS3: 2.1 TS3: 2.2.1 TS3: 2.2.13 TS3: 2.3.11	Pricing Update Message with an Effective Date that is equal to the current date. (D)	Message stored in Journal, Receipt Message with Receipt code 7 (C) is sent to the originator and no further action is taken.	F	Prototype Test Production	No No No	Yes Yes No	External External No	

Test	REF	Case	Expect results	Test type	Environment	Required before entering	Required during	Certification	Pass/Fail
IDE-10.9	PS: 10.3.1 to PS: 10.3.4 PS: 10.3.7 to PS: 10.3.11 PS: 10.3.15 TS1: 3.2 TS1: 3.3.1 TS1: 3.3.2 TS1: 3.3.3 TS1: 3.3.8 TS1: 3.9 TS3: 2.1 TS3: 2.2.1 TS3: 2.2.13 TS3: 2.3.11	Pricing Update Message with an invalid Pricing File parameter. (D)	Message stored in Journal, Receipt Message with Receipt code 7 (C) is sent to the originator and no further action is taken.	F	Prototype Test Production	No No No	Yes Yes No	External External No	
IDE-10.10	PS: 10.3.1 to PS: 10.3.4 PS: 10.3.7 to PS: 10.3.11 PS: 10.3.15 TS1: 3.2 TS1: 3.3.1 TS1: 3.3.2 TS1: 3.3.3 TS1: 3.3.8 TS1: 3.9 TS3: 2.1 TS3: 2.2.1 TS3: 2.2.13 TS3: 2.3.11	Pricing Update Message with an invalid Test parameter. (D)	Message stored in Journal, Receipt Message with Receipt code 7 (C) is sent to the originator and no further action is taken.	F	Prototype Test Production	No No No	Yes Yes No	External External No	

Test	REF	Case	Expect results	Test type	Environment	Required before entering	Required during	Certification	Pass/Fail
IDE-10.11	PS: 10.3.1 to PS: 10.3.4 PS: 10.3.7 to PS: 10.3.11 PS: 10.3.15 TS1: 3.2 TS1: 3.3.1 TS1: 3.3.2 TS1: 3.3.3 TS1: 3.3.8 TS1: 3.9 TS3: 2.1 TS3: 2.2.1 TS3: 2.2.13 TS3: 2.3.11	Valid Pricing Update Message. (D)	Message stored in Journal, pricing file is processed and Pricing Notification message is broadcast. (G)	F	Prototype Test Production	No No No	Yes Yes No	External External No	

Appendix 3-A

INTERNATIONAL LRIT DATA EXCHANGE TEST PROCEDURES AND CASES

Test Procedures and cases for the first Modification testing

Table 3-A.1

Test procedure IDE-11.0

Test	REF	Test procedure	Pass/Fail
IDE-11.0	PS: 10.3.1 to PS: 10.3.4 PS: 10.3.8 to PS: 10.3.11 PS: 12.1 TS1: 2.1.1 TS1: 3.2 TS1: 3.3.2 TS1: 3.3.3 TS1: 3.3.4 TS3: 2.2.5	IDE receives a Receipt Message from DC1. Communication paths specified in parentheses for each test case. All parameters associated with each message should be valid unless specified otherwise in a given test case.	

Test cases IDE-11.1 to IDE-11.2

Test	REF	Case	Expect results	Test type	Environment	Required before entering	Required during	Certification	Pass/Fail
IDE-11.1	PS: 10.3.1 to PS: 10.3.4 PS: 10.3.8 to PS: 10.3.11 PS: 12.1 TS1: 2.1.1 TS1: 3.2 TS1: 3.3.2 TS1: 3.3.3 TS1: 3.3.4 TS3: 2.2.5	Receipt Message received with all valid message parameters addressed to a Data Centre. (D)	Message stored in Journal, IDE routes message to the appropriate DC. (F)	F	Prototype Test Production	N/A No No	N/A Yes No	N/A Internal N/A	
IDE-11.2	PS: 10.3.1 to PS: 10.3.4 PS: 10.3.8 to PS: 10.3.11 PS: 12.1 TS1: 2.1.1 TS1: 3.2 TS1: 3.3.2.3 TS1: 3.3.3 TS1: 3.3.4 TS3: 2.2.5	SAR SURPIC Receipt message received (Message type 7 with ReceiptCode = 1, 'no ship in SAR SURPIC area') with invalid DDP version number parameter (D)	Message stored in Journal, IDE routes message to the appropriate DC. (F)	F	Prototype Test Production	N/A No No	N/A Yes No	N/A Internal N/A	

Table 3-A.2

Test procedure IDE-12.0

Test	REF	Test procedure	Pass/Fail
IDE-12.0	PS: 10.3.1 to PS: 10.3.4 PS: 10.3.8 to PS: 10.3.11 PS: 10.3.15 TS1: 2.1.1 TS1: 3.2 TS1: 3.3.2 TS1: 3.3.3 TS1: 3.3.8 TS1: 3.9 TS3: 2.1 TS3: 2.2.1 TS3: 2.2.12 TS3: 2.3.11	IDE receives a Pricing Request message. Communication paths specified in parentheses for each test case. All parameters associated with each message should be valid unless specified otherwise in a given test case.	

Test case IDE-12.1

Test	REF	Case	Expect results	Test type	Environment	Required before entering	Required during	Certification	Pass/Fail
IDE-12.1	PS: 10.3.1 to PS: 10.3.4 PS: 10.3.8 to PS: 10.3.11 PS: 10.3.15 TS1: 2.1.1 TS1: 3.2 TS1: 3.3.2 TS1: 3.3.3 TS1: 3.3.8 TS1: 3.9 TS3: 2.1 TS3: 2.2.1 TS3: 2.2.12 TS3: 2.2.13 TS3: 2.3.11	Valid Pricing Request Message. (D)	Message stored in Journal, pricing update message (message type 15) is sent to the requestor. (C)	F	Prototype Test Production	N/A No No	N/A Yes Yes	N/A Internal N/A	

Appendix 4

LRIT Data Distribution Plan server test procedure and cases

The Pass/Fail column of a particular test case indicates the results of the specific test. A pass entry should be made when *the test has been satisfactorily conducted and the results are satisfactory. A* fail *entry* should be made when *either the test cannot be conducted or the envisaged test cannot be satisfactorily carried out or the results of the test are not satisfactory.*
The Pass/Fail column of a particular test procedure summarizes the results of the associated *test cases. A pass entry* should be made when *all associated test cases have been* satisfactorily conducted and their results are satisfactory*. A fail entry* should be made when the test of anyone of the associated test cases cannot be conducted or the envisaged test cannot be satisfactorily carried out or the results of the test are not satisfactory*.*

Table 4.1

Test procedure DDP-1.0

Test	REF	Test procedure	Pass/Fail
DDP-1.0	PS: 11.3 TS3: 2.2.6 TS4: 6.6.3	DDP server sends a DDP Notification Message in response to input from Contracting Governments. Communication paths specified in parentheses for each test case. All parameters associated with each message should be valid unless specified otherwise in a given test case.	

Test cases DDP-1.1 to DDP-1.4

Test	REF	Case	Expect results	Test type	Environment	Required before entering	Required during	Certification	Pass/Fail
DDP-1.1	PS: 11.3 TS3: 2.2.6 TS4: 6.6.3	DDP server sends a DDP Notification Message with all valid Message parameters in response to submission of any immediate DDP information via the DDP web interface by a Contracting Government, within 3 min of the submission. (A)	Verify that the DDP server sends a DDP Notification Message with an immediate update type within the specified time period. (A)	F	Prototype Test Production	No N/A N/A	Yes N/A N/A	External N/A N/A	
DDP-1.2	PS: 11.3 TS3: 2.2.6 TS4: 6.6.3	DDP server sends a DDP Notification Message with all valid Message parameters in response to submission of any regular DDP information within 3 min of the submission from a Contracting Government, at 00:00 UTC following the day of submission. (A)	Verify that the DDP server sends a DDP Notification Message at the following 00:00 UTC with a regular update type. (A)	F	Prototype Test Production	No N/A N/A	Yes N/A N/A	External N/A N/A	

Test	REF	Case	Expect results	Test type	Environment	Required before entering	Required during	Certification	Pass/Fail
DDP-1.3	PS: 11.3 TS3: 2.2.7 TS3: 2.2.8 TS4: 6.6 and 6.7 TS4: 3.8 to 3.15	Upon performing test DDP-1.1, the DDP server receives a DDPRequest message and sends a DDPUpdate in response.	Verify that the DDP XML contained with the DDPUpdate message corresponds to the change made to the specific immediate DDP information via the web interface. Also verify that the published and implementation times specified within the DDPUpdate message are correct.	F	Prototype Test Production	No N/A N/A	Yes N/A N/A	External N/A N/A	
DDP-1.4	PS: 11.3 TS3: 2.2.7 TS3: 2.2.8 TS4: 6.6 and 6.7 TS4: 3.8 to 3.15	Upon performing test DDP-1.2, the DDP server receives a DDPRequest message and sends a DDPUpdate in response.	Verify that the DDP XML contained with the DDPUpdate message corresponds to the change(s) to regular DDP information made via the web interface. Also verify that the published and implementation times specified within the DDPUpdate message are correct.	F	Prototype Test Production	No N/A N/A	Yes N/A N/A	External N/A N/A	

Table 4.2

Test procedure DDP-2.0

Test	REF	Test procedure	Pass/Fail
DDP-2.0	PS: 11.3 TS3: 2.2.7 TS4: 6.6 and 6.7	DDP server receives a DDP Request Message from a DC or the IDE. Communication paths specified in parentheses for each test case. All parameters associated with each message should be valid unless specified otherwise in a given test case.	

Test cases DDP-2.1 to DDP-2.9

Test	REF	Case	Expect results	Test type	Environment	Required before entering	Required during	Certification	Pass/Fail
DDP-2.1	PS: 11.3 TS3: 2.2.7 TS3: 2.2.5 TS4: 3.6 and 3.7 TS4: 6.6	DDP server receives a DDP Request Message with Update Type other than 4, and either the "Archived DDP Version Number" or "Archived DDP Timestamp" parameters or both, are specified. (B, I)	DDP server sends a receipt Message with code 7 to the originator. (A, J)	F	Prototype Test Production	No N/A N/A	Yes N/A N/A	External N/A N/A	
DDP-2.2	PS: 11.3 TS3: 2.2.7 TS3: 2.2.5 TS4: 3.6 and 3.7 TS4: 6.6	DDP server receives a DDP Request Message with Update Type 4, and the "Archived DDP Version Number" parameter has an invalid value. (B, I)	DDP server sends a receipt Message with code 7 to the originator. (A, J)	F	Prototype Test Production	No N/A N/A	Yes N/A N/A	External N/A N/A	

Test	REF	Case	Expect results	Test type	Environment	Required before entering	Required during	Certification	Pass/Fail
DDP-2.3	PS: 11.3 TS3: 2.2.7 TS3: 2.2.5 TS4: 3.6 and 3.7 TS4: 6.6	DDP server receives a DDP Request Message with Update Type 4, and the "Archived DDP Time stamp" parameter has a value that is not in the past. (B, I)	DDP server sends a receipt Message with code 7 to the originator. (A, J)	F	Prototype Test Production	No N/A N/A	Yes N/A N/A	External N/A N/A	
DDP-2.4	PS: 11.3 TS3: 2.2.7 TS3: 2.2.8 TS4: 3.8 to 3.20 TS4: 6.6 and 6.7	DDP server receives a DDP Request Message with update type 0 and all valid parameters. (B, I)	DDP server sends a DDP Update Message with an Incremental Update containing all changes to regular DDP information between the version implemented by the originator and the most recently published version of the DDP as at the time of request. (A, J)	F	Prototype Test Production	No N/A N/A	Yes N/A N/A	External N/A N/A	
DDP-2.5	PS: 11.3 TS3: 2.2.7 TS3: 2.2.8 TS4: 3.8 to 3.20 TS4: 6.6 and 6.7	DDP server receives a DDP Request Message with update type 1 and all valid parameters. (B, I)	DDP server sends a DDP Update Message with an Incremental Update containing all changes to immediate DDP information between the version implemented by the originator and the most recently published version of the DDP as at the time of request. (A, J)	F	Prototype Test Production	No N/A N/A	Yes N/A N/A	External N/A N/A	

Test	REF	Case	Expect results	Test type	Environment	Required before entering	Required during	Certification	Pass/Fail
DDP-2.6	PS: 11.3 TS3: 2.2.7 TS3: 2.2.8 TS4: 3.8 to 3.20 TS4: 6.6 and 6.7	DDP server receives a DDP Request Message with update type 2 and all valid parameters. (B, I)	DDP server sends a DDP Update Message with an Incremental Update containing all changes to the DDP between the version implemented by the originator and the most recently published version of the DDP as at the time of request. (A, J)	F	Prototype Test Production	No N/A N/A	Yes N/A N/A	External N/A N/A	
DDP-2.7	PS: 11.3 TS3: 2.2.7 TS3: 2.2.8 TS4: 3.6 and 3.7	DDP server receives a DDP Request Message with update type 3 and all valid parameters. (B, I)	DDP server sends a DDP Update Message with the version of the Full DDP implemented within the LRIT system at the time of the request P. (A, J)	F	Prototype Test Production	No N/A N/A	Yes N/A N/A	External N/A N/A	
DDP-2.8	PS: 11.3 TS3: 2.2.7 TS3: 2.2.8 TS4: 3.6 and 3.7 TS4: 6.6	DDP server receives a DDP Request Message with update type 4 and all valid parameters, with the archived DDP version number parameter specified. (B, I)	DDP server sends a DDP Update Message with the requested version of the Full DDP. (A, J)	F	Prototype Test Production	No N/A N/A	Yes N/A N/A	External N/A N/A	
DDP-2.9	PS: 11.3 TS3: 2.2.7 TS3: 2.2.8 TS4: 3.6 and 3.7 TS4: 6.6	DDP server receives a DDP Request Message with update type 4 and all valid parameters, with the archived DDP Time stamp parameter specified. (B, I)	DDP server sends a DDP Update Message with the archived version of the Full DDP implemented within the LRIT system at the specified time. (A, J)	F	Prototype Test Production	No N/A N/A	Yes N/A N/A	External N/A N/A	

Table 4.3

Test procedure DDP-3.0

Test	REF	Test procedure	Pass/Fail
DDP-3.0	PS: 11.3 TS3: 2.2.9 TS4: 6.6	DDP server receives a System Status Message (Message Type 11) from the IDE. Communication paths specified in parentheses for each test case. All parameters associated with each message should be valid unless specified otherwise in a given test case.	

Test cases DDP-3.1 to DDP-3.2

Test	REF	Case	Expect results	Test type	Environment	Required before entering	Required during	Certification	Pass/Fail
DDP-3.1	PS: 11.3 TS3: 2.2.9 TS4: 6.6	DDP server receives System Status Message from IDE with all valid Message parameters. (B)	Verify reception of message and no further action required by DDP server.	F	Prototype Test Production	No N/A N/A	Yes N/A N/A	Internal N/A N/A	
DDP-3.2	PS: 11.3 TS3: 2.2.9 TS4: 6.6	Message validation with invalid Message parameter. (B)	A SOAP Fault or Receipt Message with Receipt code 7 is sent with message text indicating the reason for rejection. (A)	C	Prototype Test Production	No N/A N/A	Yes N/A N/A	External N/A N/A	

Table 4.4

Test procedure DDP-4.0

Test	REF	Test procedure	Pass/Fail
DDP-4.0	PS: 11.3 TS3: 2.2.9 TS4: 6.6	DDP server sends a System Status Message (Message Type 11) to the IDE. Communication paths specified in parentheses for each test case. All parameters associated with each message should be valid unless specified otherwise in a given test case.	

Test case~~s~~ DDP-4.1

Test	REF	Case	Expect results	Test type	Environment	Required before entering	Required during	Certification	Pass/Fail
DDP-4.1	PS: 11.3 TS3: 2.2.9 TS4: 6.6	Check if DDP server sends System Status Message every 30 min to IDE with all valid Message parameters. (A)	Verify transmission of message.	F	Prototype Test Production	No N/A N/A	Yes N/A N/A	External N/A N/A	

Table 4.5

Test procedure DDP-5.0

Test	REF	Test procedure	Pass/Fail
DDP-5.0	PS: 11.3 TS3: 2.2.5 TS4: 6.6	DDP server receives a Receipt (Message Type 7) sent by a DC or the IDE. Communication paths specified in parentheses for each test case. All parameters associated with each message should be valid unless specified otherwise in a given test case.	

Test cases DDP-5.1 to DDP-5.2

Test	REF	Case	Expect results	Test type	Environment	Required before entering	Required during	Certification	Pass/Fail
DDP-5.1	PS: 11.3 TS3: 2.2.5 TS4: 6.6	DDP server receives Receipt Message from IDE or DC with all valid Message parameters. (I, B)	Verify reception of message and no further action required by DDP server.	F	Prototype Test Production	No N/A N/A	Yes N/A N/A	Internal N/A N/A	
DDP-5.2	PS: 11.3 TS3: 2.2.5 TS4: 6.6	Message validation with invalid Message parameter. (I, B)	A SOAP Fault or Receipt Message with Receipt code 7 is sent with message text indicating the reason for rejection. (J, A)	C	Prototype Test Production	No N/A N/A	Yes N/A N/A	External N/A N/A	

Appendix 5

MODEL OF A SUMMARY REPORT

(to be used by LRIT Data Centres when reporting test results after testing in the prototype, testing and production environments)

Guidance Notes:

The following notes and instructions should be observed and adhered to as otherwise this may lead to delays in considering the test results being reported:

(1.1) An electronic version of the Summary report may be obtained from the Secretariat upon request.

(1.2) All entries other than signatures should be done electronically in word format. The part containing the signature should be scanned after it has been signed and send to the Secretariat together with the electronically completed Summary report.

(1.3) All dates in should be numeric in the format DD/MM/YY.

(1.4) All times should be UTC in the format HH:MM.

(2) Part I should be completed by the LRIT Data Centre which has completed the testing process. It should be sent to the Secretariat together with the completed test procedures and tests cases using appendix 2. An electronic version of appendix 2 in word format may be obtained from the Secretariat upon request.

Section 3 should indicate the first and last date and time of testing

Section 4 should indicate the first and last date and time of testing with the LRIT Data Centres assisting the testing, the International LRIT Data Exchange and the LRIT Data Distribution Plan server so as to enable these to easily trace the test results and related records at their end with a view to providing the external certification of the test results requested of them.

(3.1) Part II should be completed by the first LRIT Data Centre assisting the testing process (the 1st-ast-DC) and should be sent to the Secretariat. The Record of externally certified test results should be completed first before completing and signing the External certification of test results. Before completing this part please read notes (3.2) and (7.1) to (7.4) below.

(3.2) Before completing the column headed Results in Table A in Part II in relation to test case DC-2.1, Tables B and C in Part II should be completed first. The entry should be Yes only if:

(a) all the tests for Message type 4 for the combinations of access type and request type specified in Tables B; <u>and</u>

(b) all the tests for Message type 5 for the combinations of access type and request type specified in Tables C,

have been conducted and what is specified in Tables 2.2.1 and 2.2.2 in appendix 2 under the column headed as Expected results against the corresponding combinations have been achieved or happened.

Otherwise the entry should be No and related explanations should be provided using Part VI with cross reference under comments to the combinations of access type and request type the issue relates to.

(4) Part III should be completed by the second LRIT Data Centre assisting the testing process (the 2nd-ast-DC), as far as test case DC-2.2, and should be sent to the Secretariat. The Record of externally certified test results should be completed first before completing and signing the External certification of test results. Before completing this part please read notes (7.1) to (7.4) below.

(5) Part IV should be completed by the United States as provider of the International LRIT Data Exchange (the IDE) on an interim basis and should be sent to the Secretariat. The Record of externally certified test results should be completed first before completing and signing the External certification of test results. Before completing this part please read notes (7.1) to (7.4) below.

(6) Part V should be completed by the Secretariat as provider of the LRIT Data Distribution Plan server (the DDP server). The Record of externally certified test results should be completed first before completing and signing the External certification of test results. Before completing this part please read notes (7.1) to (7.4) below.

(7.1) The Record of externally certified test results provided in Parts II to V should be completed by the 1st-ass-DC, the 2nd-ass-DC, the United States and the Secretariat, respectively, in support of the External certification of test results to be provided by completing and signing Parts II to V.

(7.2) The entries to be made under column headed Results in the tables provided in Parts II to V, under the heading Record of externally certified test results, should be either Yes or No.

(7.3) Subject to note 3.2, entering Yes under column headed Results in the tables provided in Parts II to V means that the related test case has been conducted and what is specified in appendix 2 under the column headed as Expected results against the test case has been achieved or happened.

(7.4) In case the entry under column headed Results in the tables provided in Parts II to V is a No, Part VI (see note (8) below) should be completed in order to provide related explanations citing the test case the issue relates to.

(8) Part VI should be used when test results can not be confirmed (i.e. any of the entries any one of tables provided in Parts II to V is No) or when there is a need to provide comments in relation to any of the test results or the confirmation provided by completing the Parts II to V.

The user of this part should indicate Yes under the appropriate column in section 1 and the rest of the columns should be left empty.

In section 2 further comment boxes may be added as necessary.

SUMMARY REPORT

Part I – Statement of completion of testing and certification of test results
(to be completed by the LRIT Data Centre tested)

Environment	Prototype/Testing/Production[1]

1 Details of the LRIT Data Centre (DC) tested

Contracting Government[2]

Type of LRIT Data Centre National/Regional/Cooperative[3]

Providing services also to[4]

LRIT ID (of DC)[5]

2 Dates and times (UTC) between which the testing was conducted

Started on	***Ended on***

3 LRIT Data Centres (1st-ast-DC and 2nd-ast-DC (for test case DC-2.2 only)) which assisted the testing

1st-ast-DC[6]	
2nd-ast-DC[7] *(for test case DC-2.2 only)*	

4 Dates and times (UTC) between which the testing was conducted with the 1st-ast-DC, the 2nd-ast-DC, the IDE and the DDP server

Testing with	***1st-ast-DC***	***2nd-ast-DC***	***IDE***	***DDP server***
Started on				
Ended on				

1 Delete as appropriate.
2 In the space provided enter the name of the Contracting Government(s) establishing the LRIT Data Centre.
3 Delete as appropriate.
4 In the space provided enter the name(s) of the Contracting Government(s) (other than the Contracting Government(s) establishing the LRIT Data Centre tested) to which the LRIT Data Centre is providing services.
5 In the space provided enter the LRIT ID used by DC during the testing.
6 In the space provided enter the name(s) of the Contracting Government(s) establishing the LRIT Data Centre.
7 In the space provided enter the name(s) of the Contracting Government(s) establishing the LRIT Data Centre.

5 Completion of testing and certification of test results (to be completed and signed by the person and in charge of the operation of the LRIT Data Centre tested)

I hereby certify that all tests specified in appendix 2 of the Protocols have been conducted and the results of the tests are those specified in appendix 2 of the Protocols under the column headed Expected results against each of the test procedures and test cases. I also declare that I am duly authorized to certify the conduct of the aforesaid tests and their results.
(Signature of the person) *Date*
Name, title and contact details (telephone and facsimile numbers and e-mail address) of the person who signed above

Part II – Confirmation of test results as far as this involved 1st-ast-DC
(To be completed and signed by the person in charge of the operation of 1st-ast-DC)

Record of externally certified test results

Table A

(In relation to test case DC-2.1, follow the instructions provided under note (8) before entering Yes or No under the column headed Results)

Required in the				
Prototype Environment	***Test Environment***	***Production Environment***	***Test case***	***Results*** *(Yes/No)*
Yes	Yes	No	DC-2.1	
Yes	Yes	No	DC-2.2	
Yes	Yes	No	DC-2.4	
Yes	Yes	No	DC-2.5	
Yes	Yes	No	DC-2.6	
Yes	Yes	No	DC-2.7	
Yes	Yes	No	DC-2.8	
Yes	Yes	No	DC-2.9	
Yes	Yes	No	DC-3.1	
Yes	Yes	No	DC-3.2	
Yes	Yes	No	DC-15.1	
Yes	Yes	No	DC-15.2	
Yes	Yes	No	DC-15.3	
Yes	Yes	No	DC-16.1	
Yes	Yes	No	DC-16.2	

Table B

Test case DC-2.1
(Message Type 4)
Combinations of access type and request type specified in Table 2.2.1

Required in the					
Prototype Environment	***Test Environment***	***Production Environment***	***Access Type***	***Request Type***	***Results*** *(Yes/No)*
Yes	Yes	No	0	1	
Yes	Yes	No	0	2	
Yes	Yes	No	0	3	
Yes	Yes	No	0	4	
Yes	Yes	No	0	5	

Required in the					
Prototype Environment	***Test Environment***	***Production Environment***	***Access Type***	***Request Type***	***Results*** *(Yes/No)*
Yes	Yes	No	0	6	
Yes	Yes	No	0	7	
Yes	Yes	No	0	8	
Yes	Yes	No	0	9	
Yes	Yes	No	0	10	
Yes	Yes	No	0	11	
Yes	Yes	No	1	0	
Yes	Yes	No	1	1	
Yes	Yes	No	1	2	
Yes	Yes	No	1	3	
Yes	Yes	No	1	4	
Yes	Yes	No	1	7	
Yes	Yes	No	1	8	
Yes	Yes	No	1	9	
Yes	Yes	No	2	0	
Yes	Yes	No	2	1	
Yes	Yes	No	2	2	
Yes	Yes	No	2	3	
Yes	Yes	No	2	4	
Yes	Yes	No	2	5	
Yes	Yes	No	2	6	
Yes	Yes	No	2	8	
Yes	Yes	No	2	9	
Yes	Yes	No	2	10	
Yes	Yes	No	2	11	
Yes	Yes	No	3	0	
Yes	Yes	No	3	1	
Yes	Yes	No	3	2	
Yes	Yes	No	3	3	
Yes	Yes	No	3	4	
Yes	Yes	No	3	7	
Yes	Yes	No	3	8	
Yes	Yes	No	3	9	
Yes	Yes	No	5	0	
Yes	Yes	No	5	1	
Yes	Yes	No	5	2	

Required in the					
Prototype Environment	***Test Environment***	***Production Environment***	***Access Type***	***Request Type***	***Results*** *(Yes/No)*
Yes	Yes	No	5	3	
Yes	Yes	No	5	4	
Yes	Yes	No	5	7	
Yes	Yes	No	5	8	
Yes	Yes	No	5	9	

Table C

Test case DC-2.1
(Message Type 5)
Combinations of access type and request type specified in Table 2.2.2

Required in the					
Prototype Environment	***Test Environment***	***Production Environment***	***Access Type***	***Request Type***	***Results*** *(Yes/No)*
Yes	Yes	No	6	1	
Yes	Yes	No	6	9	

External certification of test results

I hereby certify that [, subject to the information provided in Part VI,[8]] the information provided in the above record are true and correct as far as the involvement of the 1st-ast-DC in the testing of the LRIT Data Centre specified in Part I is concerned and I declare that I am duly authorized to certify the conduct of the aforesaid tests and the related results.
(Signature of the person) *Date*
Name, title and contact details (telephone and facsimile numbers and e-mail address) of the person who signed above

[8] To be included if necessary (refer to note (8)).

Part III – Confirmation of test results as far as this involved 2nd-ast-DC
(To be completed and signed by the person in charge of the operation of 2nd-ast-DC)

Record of externally certified test results

Required in the				
Prototype Environment	***Test Environment***	***Production Environment***	***Test case***	***Results*** *(Yes/No)*
Yes	Yes	No	DC-2.2	

External certification of test results

I hereby certify that [, subject to the information provided in Part VI,[9]] the information provided in the above record are true and correct as far as the involvement of the 2nd-ast-DC in the testing of the LRIT Data Centre specified in Part I is concerned and I declare that I am duly authorized to certify the conduct of the aforesaid tests and the related results.
(Signature of the person) *Date*
Name, title and contact details (telephone and facsimile numbers and e-mail address) of the person who signed above

[9] To be included if necessary (refer to note (8)).

Part IV – Confirmation of test results as far as this involved the IDE
(To be completed and signed on behalf of the United States)

Record of externally certified test results

Required in the				
Prototype Environment	***Test Environment***	***Production Environment***	***Test case***	***Results*** *(Yes/No)*
Yes	Yes	Yes	DC-1.1	
Yes	Yes	Yes	DC-6.1	
Yes	Yes	No	DC-7.1	
Yes	Yes	Yes	DC-8.1	
Yes	Yes	Yes	DC-9.1	
Yes	Yes	No	DC-10.1	
Yes	Yes	No	DC-13.1	
Yes	Yes	No	DC-13.2	
Yes	Yes	No	DC-13.3	
Yes	Yes	No	R/CDC-14.1*	

* if applicable

External certification of test results

I hereby certify that [, subject to the information provided in Part VI,[10]] the information provided in the above record are true and correct as far as the involvement of the IDE in the testing of the LRIT Data Centre specified in Part I is concerned and I declare that I am duly authorized to certify the conduct of the aforesaid tests and the related results.
(Signature of the person) *Date*
Name, title and contact details (telephone and facsimile numbers and e-mail address) of the person who signed above

[10] To be included if necessary (refer to note (8)).

Part V – Confirmation of test results as far as this involved the DDP server
(To be completed and signed by the Secretariat)

Record of externally certified test results

Required in the				
Prototype Environment	***Test Environment***	***Production Environment***	***Test case***	***Results*** *(Yes/No)*
Yes	Yes	No	DC-11.1	
Yes	Yes	No	DC-11.2	
Yes	Yes	Yes	DC-12.1	

External certification of test results

I hereby certify that [, subject to the information provided in Part VI,[11]] the information provided in the above record are true and correct as far as the involvement of the DDP server in the testing of the LRIT Data Centre specified in Part I is concerned and I declare that I am duly authorized to certify the conduct of the aforesaid tests and the related results.
(Signature of the person) *Date*
Name, title and contact details (telephone and facsimile numbers and e-mail address) of the person who signed above

[11] To be included if necessary (refer to note (8)).

Part VI – Comments in relation to the external certification of test result
(for use, when necessary, by the 1st-ast-DC, the 2nd-ast-DC, the IDE and the DDP server as outlined in note (8))

1 The following comments are submitted by:

1st-ast-DC	***2nd-ast-DC***	***IDE***	***DDP server***

2 The external certification provided in Part II/III/IV/V[12] *is subject to the following comments:*

Test case:	
Comment(s):	

Test case:	
Comment(s):	

Test case:	
Comment(s):	

[12] Delete as appropriate.

Appendix 6

EXPLANATORY NOTES AND GUIDANCE ON THE CONDUCT OF TESTING OF LRIT DATA CENTRES

1 The intent of this document is to provide explanatory notes and guidance on the conduct testing of LRIT Data Centres in relation to the test cases stipulated in the Protocols when a:

.1 National (NDC) LRIT Data Centres:

.1 is to undergo testing for first time and is contemplating to start providing services to Contracting Government(s) other than that it is establishing the centre;

.2 operating in production environment, is contemplating to start providing services to Contracting Government(s) other than that established the centre;

.3 operating in production environment, is contemplating to become a RDC or a CDC; or

.4 operating in production environment and already providing services to other Contracting Government(s), is contemplating to provide services to Contracting Government(s) which was/were not included in previous testing;

.2 Regional (RDC) or Cooperative (CDC) LRIT Data Centres:

.1 is to undergo testing for first time; or

.2 operating in production environment, is contemplating to provide services to other Contracting Government(s) which was/were not included in previous testing.

2 The explanatory notes and guidance set out in this document should always be read together with the Protocols. Every reference to the Protocols constitutes at the same time a reference to the explanatory notes and guidance set out in this document.

3 The explanatory notes and guidance set out in this document should be observed and adhered to when conducting the test procedures and test cases specified in appendix 2 to the annex of the Protocols as specified in the table set out below. The test cases referred to in the aforesaid table are those specified in appendix 2 to the annex of the Protocols.

4 In the instances referred to in paragraph 1, when recording the results of a specific test as specified in appendix 2 of the annex to the Protocols against a test case specified in the table set out below, it is implied that the specific test case has been conducted subject to the provisions of the explanatory notes and guidance set out in this document.

5 In the instances referred to in paragraph 1, when completing any one of the parts of the Summary report provided in appendix 5 of the annex to the Protocols, it is implied that the test cases specified in the table set out below have been conducted subject to the provisions of the explanatory notes and guidance set out in this document.

6 When an NDC is contemplating to start providing services to Contracting Government(s) other than that it is establishing the centre and an RDC or CDC before commencement of any testing should ascertain that the polygons of the geographical areas included by each of the Contracting Governments concerned in the testing and production environments of the LRIT Data Distribution Plan fully complied with the constraints set out in section 5 of the Technical specification for the LRIT Data Distribution Plan.

7 An NDC contemplating to start providing services to Contracting Government(s) other than that it is establishing the centre and an RDC or CDC does not have to undergo all of the test procedures and cases set out in the Protocols for each and every one of the Contracting Government(s) associated with the LRIT Data Centre (DC) (i.e. establishing, or using the services of, the DC), provided:

.1 test cases DC-1.1, DC-1.4 and DC-4.1 are carried out and satisfactorily completed for all Contracting Governments associated with the DC (i.e. in order to check the functionality of receiving a valid position report from the IDE; ascertain that LRIT Data User (LDU) address is registered with the DC; and verify that the DC can receive a valid receipt message from the IDE for each LDU);

.2 test cases DC-2.1 and DC-15.1 are carried out and satisfactorily completed for at least two Contracting Governments (which should preferably be the ones presenting the more complexities in the testing process);

.3 additional further tests are carried out so as to test all possible foreseeable operational scenarios taking into account the particularities associated with the Contracting Government(s) which would be served by the DC; and

.4 a detailed test plan is submitted to the Organization before the commencement of any tests. The Organization should in turn provide the aforesaid information and a copy of the proposed test plan to the IDE, the DCs which would be identified to assist its testing and to the LRIT Coordinator.

8 Table "Explanatory notes and guidance" provides the necessary guidance and additional expected results in relation to the test cases stipulated in the Protocols for the testing environment only.

9 A template with the necessary guidance to create the "Testing Plan" provided in item 7.4 is given at final of this appendix.

Table

Explanatory notes and guidance

		The explanatory notes and guidance applies		
Test case	**Guidance** **Expect results** (in addition to those specified in appendix 2 of the annex to the Protocols)	**NDC is contemplating to start providing services to other Contracting Government(s) and RDC or CDC is to undergo testing for the first time** (Paragraphs 1.1.1 and 1.2.1)	**NDC[1] is contemplating either to start providing services to other Contracting Government(s) or to become an RDC or a CDC** (Paragraphs 1.1.2 and 1.1.3)	**NDC[2] already providing services to other Contracting Government(s), and a RDC and CDC[3], are contemplating to provide services to a new[4] Contracting Government(s) which was/were not included in previous testing** (Paragraphs 1.1.4 and 1.2.2)
DC-1.1 DC-1.4	The specified test should be conducted for each Contracting Government establishing or using the services of the DC if is entitled to receive the LRIT information. The position report is only received by the intended recipient.	Yes	Yes (only as far as the new Contracting Government(s) is/are concerned)	Yes (only as far as the new Contracting Government(s) is/are concerned)

1 Refers to an NDC operating in the production environment of the LRIT system.
2 Refers to an NDC operating in the production environment of the LRIT system.
3 Refers to an RDC or CDC operating in the production environment of the LRIT system.
4 The term new Contracting Government(s) in this column refers to Contracting Government(s) which was or were not included in the testing when the centre in question undergone prototype testing or developmental and integration testing.

		The explanatory notes and guidance applies		
Test case	**Guidance** **Expect results** (in addition to those specified in appendix 2 of the annex to the Protocols)	**NDC is contemplating to start providing services to other Contracting Government(s) and RDC or CDC is to undergo testing for the first time** (Paragraphs 1.1.1 and 1.2.1)	**NDC[1] is contemplating either to start providing services to other Contracting Government(s) or to become an RDC or a CDC** (Paragraphs 1.1.2 and 1.1.3)	**NDC[2] already providing services to other Contracting Government(s), and a RDC and CDC[3], are contemplating to provide services to a new[4] Contracting Government(s) which was/were not included in previous testing** (Paragraphs 1.1.4 and 1.2.2)
DC-1.2 DC-1.3 DC-1.5 DC-1.6 DC-2.2 DC-2.3 DC-2.5 to DC-2.9 DC-3.3 DC-4.2 DC-5.1 and DC-5.2 DC-6.1 DC-7.1 DC-8.1 DC-9.1 and DC-9.2 DC-11.1 to DC-11.3 DC-12.1 DC-13.1 to DC-13.4 DC-15.2 to DC-16.2	The specified test should be conducted once using different LRIT Data Users. No additional expected results.	Yes	No	No

		The explanatory notes and guidance applies		
Test case	**Guidance** **Expect results** (in addition to those specified in appendix 2 of the annex to the Protocols)	**NDC is contemplating to start providing services to other Contracting Government(s) and RDC or CDC is to undergo testing for the first time** (Paragraphs 1.1.1 and 1.2.1)	**NDC[1] is contemplating either to start providing services to other Contracting Government(s) or to become an RDC or a CDC** (Paragraphs 1.1.2 and 1.1.3)	**NDC[2] already providing services to other Contracting Government(s), and a RDC and CDC[3], are contemplating to provide services to a new[4] Contracting Government(s) which was/were not included in previous testing** (Paragraphs 1.1.4 and 1.2.2)
DC-2.1	The tests specified in tables 2.2.1 and 2.2.2 should be conducted twice using two ships chosen from two different Contracting Governments. No additional expected results.	Yes	Yes (to be conducted only once)	No
DC-2.4	The specified test should be conducted once selecting one of the LRIT Data Users. The test should be repeated using a test scenario where the request message contains a request for a ship that is registered to the DC but not associated with the LRIT ID of the Contracting Government specified in the Data User Provider parameter. No additional expected results.	Yes	Yes	No

		The explanatory notes and guidance applies		
Test case	**Guidance** **Expect results** (in addition to those specified in appendix 2 of the annex to the Protocols)	**NDC is contemplating to start providing services to other Contracting Government(s) and RDC or CDC is to undergo testing for the first time** (Paragraphs 1.1.1 and 1.2.1)	**NDC[1] is contemplating either to start providing services to other Contracting Government(s) or to become an RDC or a CDC** (Paragraphs 1.1.2 and 1.1.3)	**NDC[2] already providing services to other Contracting Government(s), and a RDC and CDC[3], are contemplating to provide services to a new[4] Contracting Government(s) which was/were not included in previous testing** (Paragraphs 1.1.4 and 1.2.2)
DC-3.1 DC-3.2	The SAR SURPIC area should contain at least one ship position from each Contracting Government establishing or using the services of the DC. No additional expected results.	Yes	Yes (only as far as the new Contracting Government(s) is/are concerned)	Yes (only as far as the new Contracting Government(s) is/are concerned)
DC-4.1	The specified test should be conducted for each Contracting Government establishing or using the services of the DC. No additional expected results.	Yes	Yes (only as far as the new Contracting Government(s) is/are concerned)	Yes (only as far as the new Contracting Government(s) is/are concerned)
DC-10.1	The specified test should be conducted once. The pricing file should include the list of prices of all Contracting Governments establishing or using the services of the DC. No additional expected results.	Yes	Yes	Yes

		The explanatory notes and guidance applies		
Test case	**Guidance** **Expect results** (in addition to those specified in appendix 2 of the annex to the Protocols)	**NDC is contemplating to start providing services to other Contracting Government(s) and RDC or CDC is to undergo testing for the first time** (Paragraphs 1.1.1 and 1.2.1)	**NDC[1] is contemplating either to start providing services to other Contracting Government(s) or to become an RDC or a CDC** (Paragraphs 1.1.2 and 1.1.3)	**NDC[2] already providing services to other Contracting Government(s), and a RDC and CDC[3], are contemplating to provide services to a new[4] Contracting Government(s) which was/were not included in previous testing** (Paragraphs 1.1.4 and 1.2.2)
R/CDC-14.1	The specified test should be conducted if the R/CDC is routing internally LRIT messages. The journal file should contain a minimum of ten (10) LRIT messages. No additional expected results.	Yes	Yes	No
DC-15.1	The specified test should be conducted twice using two ships chosen from two different Contracting Governments establishing or using the services of the DC. No additional expected results.	Yes	Yes (to be conducted only once)	No

DEVELOPMENTAL TESTING PHASE

TESTING PLAN

Environment	Testing

1 Details of the LRIT Data Centre (DC) to be tested or tested

Contracting Government[1]	
Type of LRIT Data Centre	National/Regional/Cooperative[2]
Providing services also to[3]	
Contracting Governments covered by the testing[4]	
LRIT ID (of DC)[5]	

2 Details of the Contracting Governments to be used/used[6] *for each test required*

		Dates[7] ***and times***[8]***(UTC) between which the testing was conducted (the columns below to be completed during testing)***	
Test case	***Name of the Contracting Government(s) to be used or used for the specific test***	***Started on***	***Ended on***
DC-1.1	*[enter the name and LRIT ID of <u>each</u> of the Contracting Governments establishing or using the centre to be used for or used for the test]*		
DC-1.4	*[enter the name and LRIT ID of <u>each</u> of the Contracting Governments establishing or using the centre to be used for or used for the test]*		
DC-1.2	*[enter the name and LRIT ID of <u>one</u> of the Contracting Governments to be used or used for the test]*		

1 In the space provided enter the name of the Contracting Government(s) establishing the LRIT Data Centre.
2 Delete as appropriate.
3 In the space provided enter the name(s) of the Contracting Government(s) (other than the Contracting Government(s) establishing the LRIT Data Centre tested) to which the LRIT Data Centre is providing services.
4 In the space provided enter the name(s) of the Contracting Government(s) for which the LRIT Data Centre is or has been tested.
5 In the space provided enter the LRIT ID used by LRIT Data Centre during the testing.
6 Delete as appropriate.
7 All dates should be numeric in the format DD/MM/YY.
8 All times should be UTC in the format HH:MM.

		Dates[7] and times[8] (UTC) between which the testing was conducted (the columns below to be completed during testing)	
Test case	***Name of the Contracting Government(s) to be used or used for the specific test***	***Started on***	***Ended on***
DC-1.3	*[enter the name and LRIT ID of one of the Contracting Governments to be used or used for the test]*		
DC-1.5	*[enter the name and LRIT ID of one of the Contracting Governments to be used or used for the test]*		
DC-1.6	*[enter the name and LRIT ID of one of the Contracting Governments to be used or used for the test]*		
DC-2.1	*[enter the name and LRIT ID of two Contracting Governments, including into brackets the IMO ship identification number of the selected ship for each one of the Contracting Governments, to be used or used for the tests specified in Table 2.2.1 and 2.2.2 of the Protocols]*		
DC-2.2	*[enter the name and LRIT ID of one of the Contracting Governments to be used or used for the test]*		
DC-2.3	*[enter the name and LRIT ID of one of the Contracting Governments to be used or used for the test]*		
DC-2.4	*[enter the name and LRIT ID of the Contracting Government, including into brackets the IMO Ship identification number of a ship that is not associated with the LRIT Data Centre, to be used or used for the first test]*		
	[enter the name and LRIT ID of the Contracting Government, including into brackets the IMO Ship identification number of a ship that is associated with other Contracting Government establishing or using the services of the LRIT Data Centre, to be used or used for the second test]		
DC-2.5	*[enter the name and LRIT ID of one of the Contracting Governments to be used or used for the test]*		
DC-2.6	*[enter the name and LRIT ID of one of the Contracting Governments to be used or used for the test]*		
DC-2.7	*[enter the name and LRIT ID of one of the Contracting Governments to be used or used for the test]*		

		Dates[7] and times[8](UTC) between which the testing was conducted (the columns below to be completed during testing)	
Test case	***Name of the Contracting Government(s) to be used or used for the specific test***	***Started on***	***Ended on***
DC-2.8	*[enter the name and LRIT ID of one of the Contracting Governments to be used or used for the test]*		
DC-2.9	*[enter the name and LRIT ID of one of the Contracting Governments to be used or used for the test]*		
DC-3.1	*[enter the name and LRIT ID of each of the Contracting Governments establishing or using the centre to be used for or used for the test]*		
DC-3.2	*[enter the name and LRIT ID of each of the Contracting Governments establishing or using the centre to be used for or used for the test]*		
DC-4.1	*[enter the name and LRIT ID of each of the Contracting Governments establishing or using the centre to be used for or used for the test]*		
DC-4.2	*[enter the name and LRIT ID of one of the Contracting Governments to be used or used for the test]*		
DC-10.1	*[enter the name and LRIT ID of each of the Contracting Governments establishing or using the centre to be used for or used for the test]*		
R/CDC-14.1	No additional details are required		
DC-15.1	*[enter the name and LRIT ID of two Contracting Governments, including into brackets the IMO ship identification number of the selected ship for each one of the Contracting Governments, to be used or used for the test]*		
DC-15.2	*[enter the name and LRIT ID of one of the Contracting Governments to be used or used for the test]*		
DC-15.3	*[enter the name and LRIT ID of one of the Contracting Governments to be used or used for the test]*		
DC-16.1	*[enter the name and LRIT ID of one of the Contracting Governments to be used or used for the test]*		
DC-16.2	*[enter the name and LRIT ID of one of the Contracting Governments to be used or used for the test]*		

3 Comments[9] in relation to the test cases specified in section 2 (for use, when necessary, to provide additional details of the test or when a Contracting Government was not considered for a specific test) (please include additional rows as necessary)

Test case	***Name and LRIT ID of the Contracting Government(s)***	***Comment(s)***

4 Details of the person who submitting the plan/confirming that the above tests have been carried out[10]

(Signature[11] of the person) *Date[12]*
Name, title and contact details (telephone and facsimile numbers and e-mail address) of the person who signed above

9 Further comment boxes may be added as necessary.

10 Delete as appropriate.

11 The part containing the signature should be scanned after it has been signed and sent to the Secretariat together with the electronically completed report.

12 All dates should be numeric in the format DD/MM/YY.

ANNEX 2

PROCEDURES FOR THE NOTIFICATION, REPORTING AND RECORDING OF TEMPORARY SUSPENSIONS OF OPERATIONS OF, OR REDUCTION OF THE SERVICE PROVIDED BY, COMPONENTS OF THE LRIT SYSTEM

1 Introduction

1.1 Whilst the LRIT Data Centres (DCs), the International LRIT Data Exchange (IDE) and the LRIT Data Distribution Plan server (DDP server) have been designed to ensure that Contracting Governments and Search and rescue services are provided in a timely manner the LRIT information they are entitled to receive upon request or as a result of standing orders, as the case may be, it is recognized that from time to time they may need to temporarily suspend their operations or to reduce the level of service provided in order to carry out, *inter alia*, scheduled or unscheduled maintenance or upgrade of hardware or software in use or to manage or control unforeseen events such as malicious network attacks or deal with external reasons such as unavailability of, or access to, telecommunication networks or to the internet or to conduct emergency or urgent repairs or maintenance which can not be differed to a later time.

1.2 The purpose of the present procedures is to set out the processes to be followed by DCs, the IDE and the DDP server when providing salient information to the other components of the LRIT system and the LRIT Coordinator in cases where they have to temporarily suspend operations or to reduce the level of service in cases of scheduled or planned activities and unforeseen events. In addition, the present procedures set out the records to be kept in such circumstances and their availability.

1.3 The communication of information should be done by e-mail using the designated points of contact provided in the LRIT Data Distribution Plan (DDP).

2 Scheduled or planned activities requiring temporary suspension of operations or reduction of the level of service

2.1 The DC concerned, the IDE and the DDP server, as the case may be, should advise the other components of the LRIT system and the LRIT Coordinator no later than five (5) days prior to the temporary suspension of operations or reduction of the level of service on the impending situation.

2.1.1 The advice should provide information on the planned or scheduled activities to be conducted; indicate the dates and times between which the activities would take place; supply information on the consequences of the activities for example the IDE would not be available to provide services or the DDP server would be operating at a reduce rate; and advise, if possible, any measures or arrangements which the other components of the LRIT system may need to have to put in place in order to ensure the speedy and efficient resumption of normal operations or to manage any adverse effects.

2.2 The DC concerned, the IDE and the DDP server should publish an advisory notice to be posted in the case of:

.1 the IDE and the DDP server on the IDE Administrative web interface and the DDP, respectively;

.2 a DC on its web interfaces, if such an interface exists and is accessible by the other components of the LRIT system and the LRIT Coordinator or if the DC concerned does not have such interface it should consult with the IDE and or the DDP server with a view to posting the report on the IDE Administrative web interface and/or the DDP,

providing the information specified in paragraphs 2.1 and 2.1.1 and should update the notice as and when changes occur.

2.3 The DC concerned, the IDE and the DDP server, as the case may be, should remind the other components of the LRIT system and the LRIT Coordinator of the impending activities no later than 24 hours prior to the temporary suspension of operations or reduction of the level of service on the impending situation.

2.3.1 The reminder should indicate any changes in the dates and times between which the activities would take place and update the previously provided information in case any changes have occurred in the meantime.

2.3.2 The advisory notices referred to in paragraph 2.2 should be updated accordingly.

2.4 When the DC concerned or the IDE or the DDP server resumes normal operation, it should advise to this end the other components of the LRIT system and the LRIT Coordinator, indicate the date and time as from which it has resumed normal system operational status.

2.4.1 The advisory notices referred to paragraph 2.2 should be removed.

2.5 The DC concerned, the IDE and the DDP server, as the case may be, should assist and cooperate with the other components of the LRIT system with a view to enabling them to resume or continue normal operations in case they encounter any difficulties which arise as a result of the activities which it has conducted.

3 Unforeseen events requiring temporary suspension of operations or reduction of the level of service

3.1 In case of any unforeseen events the first priorities of the DC concerned, the IDE or the DDP server should be to bring the situation which affected its operation under control and to implement measures which would enable it to resume or restore its normal operation and/or to prevent the issues from spreading in the LRIT system and affecting the operation of other components of the system.

3.2 As soon as the prevailing circumstances allow so, the DC concerned, the IDE and the DDP server, as the case may be, should advise the other components of the LRIT system and the LRIT Coordinator of the situation which has been, or is being, encountered and indicate whether it would continue any temporary suspension of operations or reduction of the level of service or whether it would temporarily suspend its operations or reduce the level of service.

3.2.1 As and when developments allow so, the DC concerned, the IDE and the DDP server, as the case may be, should provide the other components of the LRIT system and the LRIT Coordinator with updated the information.

3.2.2 In case the DC concerned, the IDE and the DDP server, as the case may be, identifies that the unforeseen events it has encountered or continuous to encounter may affect the operation of any of the other components of the LRIT system, should provide to the rest of the components of the LRIT system and the LRIT Coordinator with salient information and advise

the measures or actions which has taken in order control or manage the situation and/or to resume or restore its normal operation, if such information may be of benefit to the rest of the components of the LRIT system.

3.3 If the circumstances allow so and subject to the duration of the period during which the DC concerned, the IDE or the DDP server would need to continue any temporary suspension of operations or reduction of the level of service or to temporarily suspend its operations or reduce the level of service in order to address the situation which has been, or is being, encountered, the DC concerned, the IDE and the DDP server should publish an advisory notice to be posted in the case of:

.1 the IDE and the DDP server on the IDE Administrative web interface and the DDP, respectively; and

.2 the DC concerned on its web interfaces, if such an interface existing and is accessible by the other components of the LRIT system and the LRIT Coordinator or if the DC concerned does not have such interface it should consult with the IDE and or the DDP server with a view to posting such advisory notice on the IDE Administrative web interface and/or the DDP,

providing the relevant information and should update such notices as and when developments occur.

3.4 When the DC concerned or the IDE or the DDP server resumes or restores normal operation, it should advise to this end the other components of the LRIT system and the LRIT Coordinator, indicate the dates and times when it suspended and resumed normal system operational status.

3.4.1 The advisory notices referred to in paragraph 3.3 should be removed.

3.5 The DC concerned, the IDE and the DDP server, as the case may be, should assist and cooperate with the other components of the LRIT system with a view to enabling them to resume or continue normal operations in case they encounter any difficulties which arise as a result of the unforeseen event(s) which it has encountered or as a result of the measures or actions which it has taken in order to control or manage the unforeseen event(s) and/or to resume or restore its normal operation.

4 Reporting temporary suspension of operations and reduction of level of service

4.1 The DC concerned, the IDE and the DDP server, as the case may be, should prepare, no later than 30 days after the end of the scheduled or planned activity or of an unforeseen event which affected its operation, the report set out in appendix 1.

4.2 The aforesaid report should be made available in the case of:

.1 the IDE and the DDP server on the IDE Administrative web interface and the DDP, respectively;

.2 a DC on its web interfaces, if such an interface exists and is accessible by the other components of the LRIT system and the LRIT Coordinator or if the DC concerned does not have such interface it should consult with the IDE and or the DDP server with a view to posting the report on the IDE Administrative web interface and/or the DDP.

4.3 All DCs, the IDE and the DDP server should establish the necessary procedures for the preparation, review and approval of the required reports and for the authorization of their publication.

5 Monthly recording of temporary suspension of operations and reduction of level of service

5.1 The DC concerned, the IDE and the DDP server, as the case may be, should prepare monthly records summarizing the temporary suspension of operations or reduction of the level of service as set out in appendix 2.

5.2 All DCs, the IDE and the DDP server should establish the necessary procedures for the preparation, review and approval of the required monthly reports and for the authorization of their release to other parties.

Appendix 1

REPORT ON
TEMPORARY SUSPENSION OF OPERATIONS
OR REDUCTION OF LEVEL OF SERVICE

<enter name of the LRIT component for which this report is made[1]>

Report on	Temporary suspension of operations/Reduction of the level of services provided[2]
Due to	Scheduled or planned activity(ies)/Unforeseen event(s)[2]
Commenced on	(Date and time[3])
Ended on	(Date and time[3])
Duration	(Days, hours, minutes and seconds)

Description:

Provide a summary or a brief description of what has occurred.

Chronology:

Provide a timeline of events that occurred in chronological order.

Causes and evaluation:

Provide a summary or a brief description of what caused the issue to occur.

Corrective actions (taken or planned), if any:

Provide a summary or a brief description of the steps or actions taken to correct the issue and to return LRIT component affected to normal operations.
Provide a summary or a brief description of any further steps or actions which are planned in order to prevent reoccurrence.

Recommendation(s), if any:

Provide a summary or a brief description of any recommended action(s) which the LRIT system should consider taking in order to prevent the issue from reoccurring in the component of the LRIT system which has been affected or from occurring in other ones.

Lessons learned, if any:

Provide a summary or a brief description of the lessons learned from analysis of this occurrence.

1 For example National LRIT Data Centre of […], Regional/Cooperative LRIT Data Centre […], International LRIT Data Exchange, LRIT Data Distribution Plan.
2 Delete as appropriate.
3 Universal Coordinated Time Delete as appropriate.

Pending issues:

Provide a summary or a brief description of issues which are still under investigation or have not been resolved.

Supplementary information:

Provide any further information which is deemed useful or necessary in order to form a correct understanding of this report.

Focal point:

Name, title and contact details (telephone and facsimile number and e-mail address) of a person(s) who is authorized to provide clarification(s) or further information in relation to this report.

Date:

Enter the date on which the report is issued.

Report reference:

Enter reference number of the report.

Appendix 2

MONTHLY RECORDS OF TEMPORARY SUSPENSION OF OPERATIONS OR REDUCTION OF THE LEVEL OF SERVICE

<enter name of the LRIT component for which this report is made[1]>

Case	Nature[1]	Reason[2]	Commence on[3]	Ended on[4]	Duration[5]	Initial notification sent[6]	Notification on return to normal operations sent[7]	Advisory notice posted[8]	Report reference[9] published[10]	Notes[11]

Guidance notes:

1	Enter	T: Temporary suspension of operations or R: Reduction of the level of services provided.
2	Enter	S: Scheduled or planned activity(ies) or U: /Unforeseen event(s).
3, 4	Enter	Date and Universal Coordinated Time.
5	Enter	Days, hours, minutes and seconds.
6	Enter	Date and Universal Coordinated Time when the other components of the LRIT system and the LRIT Coordinator were advised in accordance with paragraphs 2.1 or 3.2, as the case may be.
7	Enter	Date and Universal Coordinated Time when the other components of the LRIT system and the LRIT Coordinator were advised in accordance with paragraphs 2.4 or 3.4, as the case may be.
8	Enter	Yes in case an advisory notice was posted in accordance with paragraphs 2.2 or 3.3, as the case may be, or otherwise enter No.
9	Enter	The reference number of the report specified in section 4.1 which relates to the case.
10	Enter	Date on which the report specified in section 4.1 was published in accordance with paragraph 4.2.
11	Enter	Any other necessary information.

[1] For example National LRIT Data Centre of […], Regional/Cooperative LRIT Data Centre […], International LRIT Data Exchange, LRIT Data Distribution Plan.

ANNEX 3

PROCEDURES FOR THE CONSIDERATION OF PROPOSALS FOR THE AMENDMENT OF THE TECHNICAL SPECIFICATIONS FOR THE LRIT SYSTEM, THE XML SCHEMAS AND THE TEST PROCEDURES AND CASES

1 APPLICATION

1.1 The present procedures have been developed to enable the correction of errors or omissions in, and for the consideration and adoption of amendments to, the Technical specifications for the LRIT system, including the XML schemas and the test procedures and cases set out in the Protocols and arrangements for the prototype, development, integration and modification testing phases of the LRIT system (collectively referred to below as "amendments"), approved by the Committee, at its eighty-fifth session, which are necessary in order to ensure the continuation of the establishment and efficient and correct functioning of the LRIT system.

1.1.1 The present procedures are in effect between 8 December 2008 and 15 May 2009 and are only applicable between the Contracting Governments which established LRIT Data Centres (DCs) which satisfactorily completed the prototype testing phase or DCs which are, or will be, conducting testing during the developmental testing phase (collectively referred to below as "Contracting Governments establishing DCs"), the International LRIT Data Exchange (IDE) and the LRIT Data Distribution Plan (DDP) server.

1.1.2 Proposals for the consideration and adoption of amendments identified on or after 16 May 2009 should be submitted no later than 22 May 2009 for consideration, if possible, by the Committee at its eighty-sixth session.

1.1.2.1 The Secretariat should, following consultations with the Chairman and the Secretary of the Committee, bring to the attention of the Committee any proposals submitted pursuant to paragraph 1.1.2.

2 PROPOSALS

2.1 Proposals for the consideration and adoption of amendments, through correspondence, should be submitted by Contracting Governments establishing DCs, IDE and DDP server to the Secretariat by e-mail (LRIT@imo.org) using the request forms provided in appendices 1, 2 and 3, as the case may be, and should be accompanied by the documents and electronic files specified therein.

2.2 Proposals for the consideration and adoption of amendments, by the *Ad Hoc* LRIT Group, should be submitted by Contracting Governments establishing DCs, IDE and DDP server to the Secretariat in accordance with the provisions of the Guidelines on the organization and method of work of the MSC and MEPC and their subsidiary bodies (MSC-MEPC.1/Circ.2), using the request forms provided in appendices 1, 2 and 3, as the case may be, and should be accompanied by the documents and electronic files specified therein.

2.3 Copies of appendices 1 to 3, Technical specifications for the LRIT system, including the XML schemas and test procedures and test cases from the Protocols and arrangements for the prototype, development, integration and modification testing phases of the LRIT system may be obtained from the Secretariat in word format upon request.

2.4 In case a proposal, which is to be considered through correspondence, is deemed to be incomplete (i.e. it does not include all required information, documents and electronic files), the Secretariat should advise accordingly the submitter.

2.5 When a proposal is to be considered through correspondence, the Secretariat should forward by e-mail the proposal, in case it has been deemed to be complete (i.e. provide all required information, documents and electronic files), to the Contracting Governments establishing DCs, all DCs, the IDE, the DDP server (collectively referred below as "recipients of the proposal") and the LRIT Coordinator as soon as it receives such proposals.

2.5.1 When a proposal is to be considered through correspondence, the Secretariat should forward the proposal received to the person(s) who have been designated, in official communications to the Organization, by the Contracting Government concerned as the national point(s) of contact for LRIT-related matters (refer to paragraph 11.2.8 of the Performance standards) and as the point of contact for matters relating to the DC being established by Contracting Governments (refer to paragraph 11.2.11 of the Performance standards). The arrangements for forwarding proposals to the IDE should be agreed between the United States and the Secretariat.

3 CONSIDERATION OF PROPOSALS

3.1 General

3.1.1 Contracting Governments establishing DCs, the IDE and the DDP server may request the consideration of a proposal either:

.1 through correspondence in accordance with the provisions of this procedure (refer to paragraphs 3.1 to 3.2.7 and 4.1 to 4.7); or

.2 by the *Ad Hoc* LRIT Group within the framework of its terms of reference (refer to paragraphs 3.3 to 4.7).

3.1.2 In all cases, those invited to consider the proposed amendments are required and expected to satisfy themselves that the proposed amendment(s), including any consequential one(s) are sound and reasonable. In addition, they are expected to test the electronic file(s) of the amended XML schema(s), in case the proposed amendment(s) relate or entail consequential amendment(s) to the XML schema(s) and satisfy themselves that the proposed amendment(s), including any consequential one(s), are workable and improve the functionality and efficiency of the LRIT system and that their acceptance would not adversely affect the continuation of the establishment or the functioning of the LRIT system.

3.2 Consideration of proposals through correspondence

3.2.1 The Contracting Governments establishing DCs, the IDE and the DDP server (collectively referred below as "interested parties") should, within two working days after the date on which the proposal has been forwarded to them, advise the Secretariat by e-mail whether they concur with the proposed amendment(s), including any consequential one(s).

3.2.1.1 The response of the Contracting Governments establishing DCs should originate from the person(s) who have been designated, in official communications to the Organization, by the Contracting Government concerned as the national point(s) of contact for LRIT-related matters (refer to paragraph 11.2.8 of the Performance standards) or by a person who he/she has authorized to act on his/her behalf and he/she has advised to this end the Secretariat and should be copied to all recipients of the proposal.

3.2.2 In case a Contracting Government which has established or is in the process of establishing a DC does not respond within the time period specified in paragraph 3.2.1, the Secretariat should consider that the Contracting Government in question accepts the proposed amendment(s).

3.2.3 The United States, in its capacity as provider of the IDE on an interim basis and Secretariat, acting on behalf of the Organization as provider of the DDP server and of the Public Keys Infrastructure (PKIs), should always expressly state their position on the proposed amendment(s).

3.2.4 Subject to the provisions of paragraph 4.1, the proposed amendment(s), including any consequential one(s), should be deemed accepted if and only if all interested parties have communicated, subject to the provisions of paragraphs 3.2.2 and 3.2.3, to the Secretariat their acceptance.

3.2.5 In case any one of the interested parties, subject to the provisions of paragraph 3.2.2, is unable to accept the proposed amendment(s), including any consequential one(s), they should advise by e-mail the Secretariat and the other recipients of the proposal the reason(s) to this end.

3.2.5.1 In such cases, the interested parties should endeavour through consultations to resolve the issue. If such consultations do not lead to a satisfactory resolution of the issue within two working days after they have commenced, the Secretariat should advise the recipients of the proposal that the proposed amendment(s), including any consequential one(s), have been rejected.

3.2.6 In case any of the interested parties is only able to accept the proposed amendment(s), including any consequential one(s), subject to the amendment(s) in question or any consequential one(s) being modified, should advise by e-mail the Secretariat and the recipients of the proposal to this end. In such cases, the party making its acceptance conditional on the proposed amendment(s) or any consequential one(s) being modified should provide the recipients of the proposal with salient information by forwarding together with its response a completed request form, using the forms provided in annexes 1, 2 and 3, as the case may be, together with the necessary accompanying documentation and electronic files.

3.2.6.1 In such cases, the interested parties should endeavour through consultations to resolve the issue. If such consultations do not lead to a satisfactory resolution of the issue within two working days after they have commenced, the Secretariat should advise the recipients of the proposal that the proposed amendment(s), including any consequential one(s), have been rejected.

3.2.7 In all cases, all correspondence relating to matters falling within the scope of this procedure should be copied to all recipients of the proposal, the Secretariat (in case such correspondence is not addressed to the Secretariat) and the LRIT Coordinator.

3.2.8 In case a proposal is rejected, nothing prevents those who have submitted it to submit it for consideration by the *Ad Hoc* LRIT Group and/or the Committee, if they deem so appropriate.

3.3 Consideration of proposals by Ad Hoc LRIT Group

3.3.1 Consideration of proposed amendments by the *Ad Hoc* LRIT Group should be done by the Group in accordance with its terms of reference.

4 ACCEPTANCE AND IMPLEMENTATION OF AMENDMENTS

4.1 The acceptance of any amendment(s), including any consequential one(s), under this procedure, is on a provisional basis and subject to consideration and adoption of the related amendment(s) by the Committee at its eighty-sixth session.

4.2 In case the proposed amendment(s), including any consequential one(s), have been deemed accepted, the Secretariat should, as soon as possible, in case the amendment(s) relate to:

.1 the technical specifications for the LRIT system and/or the test procedures and cases, prepare a record of the amendment(s); or

.2 the XML schema, amend accordingly:

.1 the index record of the version control document of the XML schemas to indicate the new version number and date of the XML schema(s) being amended;

.2 the word format document of the XML schema(s) so as to incorporate the accepted amendment(s) and to show the new version number and date; and

.3 the related XSD file in the master XSD files so as to incorporate the accepted amendment(s) and to show its new versions number and date.

4.3 In case the proposed amendment(s), including any consequential one(s), have been deemed accepted through correspondence, the Secretariat, in consultation with the United States, in its capacity as provider of the IDE on an interim basis should establish the date and time as from which the accepted amendment(s), including any consequential one(s), are to be implemented.

4.4 In case the amendments(s) are deemed accepted by the *Ad Hoc* LRIT Group, the Group should establish the date and time as from which the accepted amendment(s), including any consequential one(s), are to be implemented.

4.5 In case the proposed amendment(s), including any consequential one(s), have been deemed accepted, the Secretariat should forward the documents and electronic files referred to in paragraph 4.2 to the Contracting Governments establishing DCs, all DCs, the IDE, the DDP server and all those who have requested in writing and received from the Secretariat copies of the XSD files as approved by the Committee, at its eighty-fifth session, and advise the date and time as from which the accepted amendment(s), including any consequential one(s), are to be implemented.

4.6 Notwithstanding the provisions of paragraph 4.1, in case the proposed amendment(s), including any consequential one(s), have been deemed accepted, all DCs, the IDE and the DDP server should implement the accepted amendment(s) and, in case these entail to any amendments of the test procedures and/or test cases:

.1 in case, prototype, developmental or integration testing phases has already been completed, conduct and satisfactorily complete all new or additional required tests; or

.2 in case testing is in hand, repeat any test(s) which have already been satisfactorily completed or conduct any pending test(s) in accordance with the amended test procedures and cases.

4.7 In case any proposed amendment(s), including any consequential one(s), have been deemed accepted through correspondence, the Secretariat should advise accordingly the Committee, at its eighty-sixth session, for the Committee to consider the matter and formally adopt the amendment(s), as it deems appropriate.

4.8 In case any of the interested parties experiences difficulties in implementing or complying with any agreed amendment under this procedure, it may proposed that the LRIT system reverts to the stage of operation it function prior to the implementation of the agreed amendment.

4.8.1 To this end, the interested party concerned may propose the consideration and adoption of amendments in accordance with the provisions of this procedure.

Appendix 1

REQUEST FOR THE CONSIDERATION OF PROPOSED AMENDMENT(S) TO THE XML SCHEMA(S) OR FOR THE MODIFICATION OF PROPOSED AMENDMENT(S)

Part I – Submitter of the proposal

1	*Submitted by*

Part II – Details of the proposed amendment(s) or of the proposed modification(s)

1	*XML schema(s)*
2	*XML schema(s) requiring consequential amendment(s), if any*
3	*Proposed amendment(s)*
4	*Proposed consequential amendment(s), if any*
5	*Brief description of the proposed amendment(s)*
6	*Brief description of the proposed consequential amendment(s), if any*
7	*Reason(s) for proposing the amendment(s), including any consequential one(s)*
8	*Impact of not implementing the proposed amendment(s), including any consequential one(s)*

9	*Consequential amendment(s) to the technical specifications for the LRIT system, if any*
10	*Consequential amendment(s) to the test procedures and/or cases, if any*
11	*Additional information (optional)*

Part III – Supporting documents and electronic files

1	The XML schema(s) in word format showing the proposed amendment(s) as track changes	
2	The XML schema(s) in their native format incorporating the proposed amendment(s)	
3	The proposed amendment(s) to the technical specifications for the LRIT system, if any (in case these are set out on separate sheet(s))	
4	The proposed amendment(s) to the test procedure(s) and/or case(s)	
5	Other document(s) *(specify)*	

Part IV – Contact details

1	*Name, title and contact details (telephone and facsimile numbers and e-mail address) of the person(s) who is authorized to provide clarification(s) or further information in relation to this proposal:*
2	*Name, title and contact details (telephone and facsimile numbers and e-mail address) of the person submitting the proposal:*

Part V – Declaration of authority

The undersigned declares that he/she is duly authorized to submit this proposal.

(Signature of the person submitting the proposal)

Date:

Guidance notes for completing the request

Part I – Submitter of the proposal

1 Submitted by

Enter the Contracting Government proposing the amendment(s) or the modification of the proposed amendment(s); or the United States in the capacity of the IDE operator; or the Secretariat.

Part II – Details of the proposed amendment(s) or of the proposed modification(s)

1 XML schema(s)

Enter the file name of the XML schema(s), the version and date of the XSD file(s) which requires amendment(s), for example Pricing.xsd, version 1.0 dated 22.08.2008.

2 XML schema(s) requiring consequential amendment(s), if any

In case any other XML schema(s) need to be amended as a result of the proposed amendment(s) under item 3, enter the name(s) of the XML schema(s), the version and date of the XSD file(s) which need to be also amended and complete accordingly item 4, or otherwise enter None.

3 Proposed amendment(s)

The following provides an illustrative example:

```
<xs:complexType name="dataCentreType">
  <xs:sequence>
    …
    <xs:element name="WebServiceLocation" type="xs:anyURI"/>
    <xs:element name="IDEInterfaceWebServiceLocation" type="xs:anyURI">
    <xs:annotation>
          <xs:documentation xml:lang="en">
            This element indicates the location of the Web Services interface to IDE communications
          </xs:documentation>
        </xs:annotation>
    </xs:element>
    <xs:element name="DDPInterfaceWebServiceLocation" type="xs:anyURI">
      <xs:annotation>
        <xs:documentation xml:lang="en">
          This element indicates the location of the Web Services interface to DDP Server communications
        </xs:documentation>
      </xs:annotation>
    </xs:element>
    …
  </xs:sequence>
</xs:complexType>
```

4 Proposed consequential amendment(s), if any

For each of the XML schema(s) identified under item 2, enter the same level of information as given in the example provided under item 3, or otherwise enter None.

5 Brief description of the proposed amendment(s)

Provide a narrative description of the amendment(s) proposed under item 3.

6 Brief description of the proposed consequential amendment(s), if any

Provide a narrative description of the consequential amendment(s) proposed under item 4, or otherwise enter None.

7 Reason(s) for proposing the amendment(s), including any consequential one(s)

Provide justification and/or explain the reason(s) why the amendment(s) proposed under items 3 and 4, if any, should be accepted.

8 Impact of not implementing the proposed amendment(s), including any consequential one(s)

Provide information on the impact of the amendment(s) proposed under items 3 and 4, if any, on the LRIT system, on the conduct of the testing of the system and on the consequences in case the proposed amendment(s) were not to be accepted.

9 Consequential amendment(s) to the technical specifications for the LRIT system, if any

In case the proposed amendment(s) under items 3 and 4, if any, require the adoption of consequential amendment(s) to the technical specifications for the LRIT system, identify the technical specification(s) which need to be amended, the related paragraph(s) thereto, provide a brief description of the required amendment(s) and set out the proposed amendment(s), or otherwise enter None.

10 Consequential amendment(s) to the test procedures and/or cases, if any

In case the proposed amendment(s) under items 3 and 4, if any, require the adoption of amendment(s) to the test procedure(s) and/or case(s), identify the test procedure(s) and/or case(s) which need to be amended, provide a brief description of the required amendment(s) and set out the proposed amendment(s) on a separate sheet, or otherwise enter None.

In view of the number of columns involved, set out the proposed amendment(s) on a separate sheet using track changes (related extract, in word format, from the Protocols and arrangements for the prototype, development, integration and modification testing phases of the LRIT system may be obtained from the Secretariat).

11 Additional information (optional)

Provide any other additional information deemed necessary in support of the proposal and/or explain the utility or reason(s) for forwarding the other document identified under item 5 of part III, or otherwise enter None.

Part III – Supporting documents and electronic files

The request should always be accompanied by:

- the documents and electronic files referred to under items 1 and 2;

- the document referred to under item 3 if the entries under item 10 of part II is other than None;

- the document referred to under item 4 if the entries under item 10 of part II is other than None.

The documents and electronic files referred to under items 1 and 2 should be the versions of those in effect at the time of the submission of the proposal and their version number and date should not be altered.

In case any other documents are submitted, item 5 should indicate Yes and the utility or reason(s) for forwarding these should be explained under item 11 of part II.

Enter Yes or No in the right column to identify the documents and electronic files which accompany the proposal.

Part IV – Contact details

1 *Name, title and contact details (telephone and facsimile numbers and e-mail address) of the person(s) who is authorized to provide clarification(s) or further information in relation to this proposal:*

No guidance is provided.

2 *Name, title and contact details (telephone and facsimile numbers and e-mail address) of the person submitting the proposal:*

The person(s) who have been designated by the Contracting Government concerned, in official communications to the Organization, as the point(s) of contact for LRIT-related matters (refer to paragraph 11.2.8 of the Performance standards) would be automatically considered as being authorized to submit the request. Otherwise, the authority of any other person submitting the request should be confirmed by the aforesaid to the Organization.

Part V – Declaration of authority

No guidance is provided.

Appendix 2

REQUEST FOR THE CONSIDERATION OF PROPOSED AMENDMENT(S) TO THE TECHNICAL SPECIFICATIONS FOR THE LRIT SYSTEM OR FOR THE MODIFICATION OF PROPOSED AMENDMENT(S)

Part I – Submitter of the proposal

1	*Submitted by*

Part II – Details of the proposed amendment(s) or of the proposed modification(s)

1	*Technical specifications for the LRIT system*
2	*Technical specifications for the LRIT system requiring consequential amendment(s), if any*
3	*Proposed amendment(s)*
4	*Proposed consequential amendment(s), if any*
5	*Brief description of the proposed amendment(s)*
6	*Brief description of the proposed consequential amendment(s), if any*
7	*Reason(s) for proposing the amendment(s), including any consequential one(s)*
8	*Impact of not implementing the proposed amendment(s), including any consequential one(s)*

9	*Consequential amendment(s) to the XML schemas, if any*
10	*Consequential amendment(s) to the test procedures and/or cases, if any*
11	*Additional information (optional)*

Part III – Supporting documents and electronic files

1	The XML schema(s) in word format showing the proposed amendment(s) as track changes, if any	
2	The XML schema(s) in their native format incorporating the proposed amendment(s), if any	
3	The proposed amendment(s) to the technical specifications for the LRIT system (in case these are set out in separate sheet(s))	
4	The proposed amendment(s) to the test procedure(s) and/or case(s), if any	
5	Other document(s) *(specify)*	

Part IV – Contact details

1	*Name, title and contact details (telephone and facsimile numbers and e-mail address) of the person(s) who is authorized to provide clarification(s) or further information in relation to this proposal:*
2	*Name, title and contact details (telephone and facsimile numbers and e-mail address) of the person submitting the proposal:*

Part V – Declaration of authority

The undersigned declares that he/she is duly authorized to submit this proposal.

(Signature of the person submitting the proposal)

Date:

Guidance notes for completing the request

Part I – Submitter of the proposal

1 Submitted by

Enter the Contracting Government proposing the amendment(s) or the modification of the proposed amendment(s); or the United States in the capacity of the IDE operator; or the Secretariat.

Part II – Details of the proposed amendment(s) or of the proposed modification(s)

1 Technical specifications for the LRIT system

Enter the name of the technical specification for the LRIT system which requires amendment(s), the related paragraph(s) thereto and the document which you are using as reference for the proposal, for example Technical specifications for communications within the LRIT system; paragraph 2.3.4.7.1 and table 14, reference document MSC.1/Circ.[1259][….] on Interim revised technical specifications for the LRIT system.

2 Technical specifications for the LRIT system requiring consequential amendment(s), if any

In case any other technical specifications for the LRIT system need to be amended as a result of the proposed amendment(s) under item 3, enter the name(s) of the technical specifications for the LRIT system which needs also to be amended, the related paragraph(s) thereto, the document which you are using as reference for the proposal and complete accordingly item 4, or otherwise enter None.

3 Proposed amendment(s)

The following provide illustrative examples:

1 The following text is inserted at the end of paragraph 7.1.4.6 of part I:

"7.2 In case any of the geographical areas to be represented by the polygons referred to in paragraph 7.1 straddles the meridian of 180 degrees longitude, the geographical area in question should be represented by two polygons having a common boundary along the 180 degrees longitude."

2 The existing paragraph 2.3.4.7.1 (previously paragraph 2.3.3.7.1) is amended to read as follows:

".1 the DC to which the ship is transmitting LRIT information receives ship position information at time point -5 5/6;"

4 Proposed consequential amendment(s), if any

For each of the technical specifications for the LRIT system identified under item 2, enter the same level of information as given in the example provided under item 3, or otherwise enter None.

5 Brief description of the proposed amendment(s)

Provide a narrative description of the amendment(s) proposed under item 3.

6 Brief description of the proposed consequential amendment(s), if any

Provide a narrative description of the consequential amendment(s) proposed under item 4, or otherwise enter None.

7 Reason(s) for proposing the amendment(s), including any consequential one(s)

Provide justification and/or explain the reason(s) why the amendment(s) proposed under items 3 and 4, if any, should be accepted.

8 Impact of not implementing the proposed amendment(s), including any consequential one(s)

Provide information on the impact of the amendment(s) proposed under items 3 and 4, if any, on the LRIT system, on the conduct of the testing of the system and on the consequences in case the proposed amendment(s) were not to be accepted.

9 Consequential amendment(s) to the XML schemas, if any

In case the proposed amendment(s) under items 3 and 4, if any, require the adoption of amendment(s) to the XML schema(s), enter the name(s) of the XML schema(s) and the version and date of the XSD file(s) which need to be also amended, provide a brief description of the required amendment(s) and enter the proposed amendment(s) to the XML schema(s) or otherwise enter None.

The following is an illustrative example:

Pricing.xsd, version 1.0 dated 22.08.2008

DDPRequest.xsd: This change will ensure that all DDPRequest messages sent to the DDP Server in response to a DDPNotification message will indicate the source DDPNotification message. Where a DDPRequest is not sent in response to a DDPNotification the ReferenceId will be empty.

```
<xs:complexType name="dataCentreType">
  <xs:sequence>
    …
    <xs:element name="WebServiceLocation" type="xs:anyURI"/>
    <xs:element name="IDEInterfaceWebServiceLocation" type="xs:anyURI">
    <xs:annotation>

<xs:documentation xml:lang="en">
            This element indicates the location of the Web Services interface to IDE communications
          </xs:documentation>
        </xs:annotation>
    </xs:element>
    <xs:element name="DDPInterfaceWebServiceLocation" type="xs:anyURI">
      <xs:annotation>
        <xs:documentation xml:lang="en">
```

```
            This element indicates the location of the Web Services interface to DDP Server communications
          </xs:documentation>
        </xs:annotation>
      </xs:element>
      …
    </xs:sequence>
</xs:complexType>
```

10 Consequential amendment(s) to the test procedures and/or cases, if any

In case the proposed amendment(s) under items 3 and 4, if any, require the adoption of amendment(s) to the test procedure(s) and/or case(s), identify the test procedure(s) and/or case(s) which need to be amendment, provide a brief description of the required amendment(s) and set out the proposed amendment(s) on a separate sheet, or otherwise enter None.

In view of the number of columns involved, set out the proposed amendment(s) on a separate sheet using track changes (related extract, in word format, from the Protocols and arrangements for the prototype, development, integration and modification testing phases of the LRIT system may be obtained from the Secretariat).

11 Additional information (optional)

Provide any other additional information deemed necessary in support of the proposal and/or explain the utility or reason(s) for forwarding the other document identified under item 5 of part III, or otherwise enter None.

Part III – Supporting documents and electronic files

The request should always be accompanied by:

- the documents and electronic files referred to under items 1 and 2 if the entries under in item 9 of part II is other than None;

- the document referred to under item 4 if the entries under item 10 of part II is other than None.

The documents and electronic files referred to under items 1 and 2 should be the versions of those in effect at the time of the submission of the proposal and their version number and date should not be altered.

In case any other documents are submitted, item 5 should indicate Yes and the utility or reason(s) for forwarding these should be explained under item 11 of part II.

Enter Yes or No in the right column to identify the documents and electronic files which accompany the proposal.

Part IV – Contact details

1 Name, title and contact details (telephone and facsimile numbers and e-mail address) of the person(s) who is authorized to provide clarification(s) or further information in relation to this proposal:

No guidance is provided.

2 Name, title and contact details (telephone and facsimile numbers and e-mail address) of the person submitting the proposal:

The person(s) who have been designated by the Contracting Government concerned, in official communications to the Organization, as the point(s) of contact for LRIT-related matters (refer to paragraph 11.2.8 of the Performance standards) would be automatically considered as being authorized to submit the request. Otherwise, the authority of any other person submitting the request should be confirmed by the aforesaid to the Organization.

Part V – Declaration of authority

No guidance is provided.

Appendix 3

REQUEST FOR THE CONSIDERATION OF PROPOSED AMENDMENT(S) TO THE TEST PROCEDURES AND/OR CASES OR FOR THE MODIFICATION OF PROPOSED AMENDMENT(S)

Part I – Submitter of the proposal

1	*Submitted by*

Part II – Details of the proposed amendment(s) or of the proposed modification(s)

1	*Test procedure(s) or test case(s)*
2	*Test procedure(s) or test case(s) requiring consequential amendment(s), if any*
3	*Proposed amendment(s)*
4	*Proposed consequential amendment(s), if any*
5	*Brief description of the proposed amendment(s)*
6	*Brief description of the proposed consequential amendment(s), if any*
7	*Reason(s) for proposing the amendment(s), including any consequential one(s)*
8	*Impact of not implementing the proposed amendment(s), including any consequential one(s)*

9	*Consequential amendment(s) to the technical specifications for the LRIT system, if any*
10	*Consequential amendment(s) to the XML schemas, if any*
11	*Additional information (optional)*

Part III – Supporting documents and electronic files

1	The XML schema(s) in word format showing the proposed amendment(s) as track changes, if any	
2	The XML schema(s) in their native format incorporating the proposed amendment(s), if any	
3	The proposed amendment(s) to the technical specifications for the LRIT system, if any (in case these are set out in separate sheet(s))	
4	The proposed amendment(s) to the test procedure(s) and/or case(s)	
5	Other document(s) *(specify)*	

Part IV – Contact details

1	*Name, title and contact details (telephone and facsimile numbers and e-mail address) of the person(s) who is authorized to provide clarification(s) or further information in relation to this proposal:*
2	*Name, title and contact details (telephone and facsimile numbers and e-mail address) of the person submitting the proposal:*

Part V – Declaration of authority

The undersigned declares that he/she is duly authorized to submit this proposal.

(Signature of the person submitting the proposal)

Date:

Guidance notes for completing the request

Part I – Submitter of the proposal

1 Submitted by

Enter the Contracting Government proposing the amendment(s) or the modification of the proposed amendment(s); or the United States in the capacity of the IDE operator; or the Secretariat.

Part II – Details of the proposed amendment(s) or of the proposed modification(s)

1 Test procedure(s) or test case(s)

Enter the name of the test procedure(s) and/or case(s) which requires amendment, and the document which you are using as reference for the proposal, for example LRIT Data Centre Test Procedures and Test Cases; Table 2.2, Test procedure DC-2.0, Test case DC-2.2 and DC-2.4, reference document MSC 85/6/1/Add.1, annex 2, annex, appendix 2.

2 Test procedure(s) or test case(s) requiring consequential amendment(s), if any

In case any other test procedure(s) and/or case(s) need to be amended as a result of the proposed amendment(s) under item 3, enter the name(s) of the test procedure(s) and/or case(s) which requires amendment(s), the document which you are using as reference for the proposal, and complete accordingly item 4, or otherwise enter None.

3 Proposed amendment(s)

In view of the number of columns involved, set out the proposed amendment(s) on a separate sheet using track changes (related extract, in word format, from the Protocols and arrangements for the prototype, development, integration and modification testing phases of the LRIT system may be obtained from the Secretariat).

4 Proposed consequential amendment(s), if any

For each of the test procedure(s) and/or case(s) identified under item 2, provide the same level of information as indicated under item 3, or otherwise enter None.

5 Brief description of the proposed amendment(s)

Provide a narrative description of the amendment(s) proposed under item 3.

6 Brief description of the proposed consequential amendment(s), if any

Provide a narrative description of the consequential amendment(s) proposed under item 4, or otherwise enter None.

7 Reason(s) for proposing the amendment(s), including any consequential one(s)

Provide justification and/or explain the reason(s) why the amendment(s) proposed under items 3 and 4, if any, should be accepted.

8 Impact of not implementing the proposed amendment(s), including any consequential one(s)

Provide information on the impact of the amendment(s) proposed under items 3 and 4, if any, on the LRIT system, on the conduct of the testing of the system and on the consequences in case the proposed amendment(s) were not to be accepted.

9 Consequential amendment(s) to the technical specifications for the LRIT system, if any

In case the proposed amendment(s) under items 3 and 4, if any, require the adoption of consequential amendment(s) to the technical specifications for the LRIT system, identify the technical specification(s) which need to be amendment, the related paragraph(s) thereto, provide a brief description of the required amendment(s) and set out the proposed amendment(s), or otherwise enter None.

10 Consequential amendment(s) to the XML schemas, if any

In case the proposed amendment(s) under items 3 and 4, if any, require the adoption of amendment(s) to the XML schema(s), enter the name(s) of the XML schema(s) and the version and date of the XSD file(s) which need to be also amended, provide a brief description of the required amendment(s) and enter the proposed amendment(s) to the XML schema(s) or otherwise enter None.

The following is an illustrative example:

Pricing.xsd, version 1.0 dated 22.08.2008

DDPRequest.xsd: This change will ensure that all DDPRequest messages sent to the DDP Server in response to a DDPNotification message will indicate the source DDPNotification message. Where a DDPRequest is not sent in response to a DDPNotification the ReferenceId will be empty.

```
<xs:complexType name="dataCentreType">
  <xs:sequence>
    …
    <xs:element name="WebServiceLocation" type="xs:anyURI"/>
    <xs:element name="IDEInterfaceWebServiceLocation" type="xs:anyURI">
    <xs:annotation>
          <xs:documentation xml:lang="en">
            This element indicates the location of the Web Services interface to IDE
communications
          </xs:documentation>
        </xs:annotation>
    </xs:element>
    <xs:element name="DDPInterfaceWebServiceLocation" type="xs:anyURI">
      <xs:annotation>
        <xs:documentation xml:lang="en">
          This element indicates the location of the Web Services interface to DDP Server
communications
        </xs:documentation>
      </xs:annotation>
    </xs:element>
  </xs:sequence>
</xs:complexType>
```

11 Additional information (optional)

Provide any other additional information deemed necessary in support of the proposal and/or explain the utility or reason(s) for forwarding the other document identified under item 5 of part III, or otherwise enter None.

Part III – Supporting documents and electronic files

The request should always be accompanied by:

- the documents and electronic files referred to under items 1 and 2 if the entries under item 10 of part II is other than None;

- the document referred to under item 3 if the entries under item 9 of part II is other than None.

The documents and electronic files referred to under items 1 and 2 should be the versions of those in effect at the time of the submission of the proposal and their version number and date should not be altered.

In case any other documents are submitted, item 5 should indicate Yes and the utility or reason(s) for forwarding these should be explained under item 11 of part II.

Enter Yes or No in the right column to identify the documents and electronic files which accompany the proposal.

Part IV – Contact details

1 Name, title and contact details (telephone and facsimile numbers and e-mail address) of the person(s) who is authorized to provide clarification(s) or further information in relation to this proposal:

No guidance is provided.

2 Name, title and contact details (telephone and facsimile numbers and e-mail address) of the person submitting the proposal:

The person(s) who have been designated by the Contracting Government concerned, in official communications to the Organization, as the point(s) of contact for LRIT-related matters (refer to paragraph 11.2.8 of the Performance standards) would be automatically considered as being authorized to submit the request. Otherwise, the authority of any other person submitting the request should be confirmed by the aforesaid to the Organization.

Part V – Declaration of authority

No guidance is provided.