U.S. Department
of Homeland Security

**United States
Coast Guard**

LOCAL NOTICE TO MARINERS

District: 11 Week: 03/21

CORRESPONDENCE TO:
COMMANDER
DISTRICT ELEVEN (DPW)
COAST GUARD ISLAND BUILDING 50-2
ALAMEDA, CA 94501-5100

REFERENCES: COMDTPUB P16502.6, Light List Volume VI, 2017 Edition, U.S. Chart No.1 12th Edition, and Coast Pilot Volume 7 49th Edition. These publications, along with corrections, are available at: https://nauticalcharts.noaa.gov/

BROADCAST NOTICE TO MARINERS - Information concerning aids to navigation and waterway management promulgated through BNM HB-0020-20, SF-0008-21, LA-0012-21, and SD-0003-21 have been incorporated in this notice, or will continue if still significant.

SECTION I - SPECIAL NOTICES

This section contains information of special concern to the Mariner.

SUBMITTING INFORMATION FOR PUBLICATION IN THE LOCAL NOTICE TO MARINERS

A complete set of guidelines with examples and contact information can be found at http://www.pacificarea.uscg.mil/Our-Organization/District-11/Prevention-Division/LnmRequest/ or call D11 Waterways Management Branch at 510-437-2980 or e-mail D11LNM@uscg.mil. Please provide all Local Notice to Mariners submissions 14 days prior to the start of operations.

BRIDGE INFORMATION- PROJECTS, DISCREPANCIES, CORRECTIONS & REGULATORY

For all bridge related issues, including lighting, operation, obstructions, construction, demolition, etc. contact the Eleventh Coast Guard District Bridge Administrator 24 hour cell phone at 510-219-4366. Flotsam may accumulate on and near bridge piers and abutments. Mariners should approach all bridges with caution. A vessel delay at a drawbridge may be reported to the District Bridge Administrator by telephone, or by using the Delay_Report_11-2017.pdf included in the Enclosures section of this Local Notice to Mariners.

BRIDGE INFORMATION-COMMUNICATIONS PROTOCOL-BENICIA/MARTINEZ UPRR BRIDGE- CARQUINEZ STRAIT

All mariners requiring a bridge lift at the Benicia-Martinez Union Pacific Railroad Bridge, mile 7.0, over the Carquinez Strait, California, should follow the protocol in the document entitled "Coordination of Communications for Union Pacific Railroad Lift Operations." Mariners can download a copy of the document by selecting the link BENICIA-MARTINEZ RR BRIDGE under the QUICK LINKS section at https://www.pacificarea.uscg.mil/vtssf.

CAUTION TO BE USED IN RELIANCE UPON AIDS TO NAVIGATION

The aids to navigation depicted on charts comprise a system of fixed and floating aids to navigation with varying degrees of reliability. Prudent mariners will not rely solely on any single aid to navigation, particularly a floating aid to navigation. With respect to buoys, the buoy symbol is used to indicate the approximate position of the buoy body and the sinker which secures the buoy to the seabed. The approximate position is used because of the practical limitations in positioning and maintaining buoys and their sinkers in precise geographical locations. These limitations include, but are not limited to, inherent imprecision in position fixing methods, prevailing atmospheric and sea conditions, slope of and the material making up the seabed, the fact that buoys are moored to sinkers by varying length of chain, and the fact that the buoy body and/or sinker positions are not under continuous surveillance, but are normally checked only during periodic maintenance visits which often occur more than a year apart. Due to the forces of nature, the position of the buoy body can be expected to shift inside and outside the charted symbol. The mariner is also cautioned that buoys may be extinguished or sound signals may not function as the result of natural causes, collisions, or other accidents. For the foregoing reasons, a prudent mariner must not rely completely upon the position or operation of floating aids to navigation, but will also utilize bearings from fixed objects and aids to navigation on shore. Furthermore, a vessel attempting to pass close aboard always risks collision with a yawing buoy or with the obstruction that the buoy marks.

HUMBOLDT BAY-SHOALING

Due to shoaling at the south jetty tip of Humboldy Bay Bar, swells in excess of 8 ft may adversely affect the main shipping channel. Mariners are requested to transit the area with caution. For more details of comments contact the United States Coast Guard Sector Humboldt Bay at 707-839-6113.

NORTHERN CALIFORNIA-HUMBOLDT BAY-SEASONAL AID DISCONTINUANCE

Humboldt Bay Lighted Bell Buoy 2 (LLNR 8135) will be temporarily discontinued for the 2020-2021 winter season until May 2021. The buoy is scheduled for re-establishment and back on-station May 2021. A Synthetic AIS for the aid position is active and will be available year-round for this aid position. For more details or comments contact LT Ruth Sadowitz at 510-437-3801 or ruth.a.sadowitz@uscg.mil.

Charts: 18620 18622 LNM: 48/20

NORTHERN CALIFORNIA-SAN FRANCISCO-HAZARD TO NAVIGATION

Coast Guard Sector San Francisco is issuing a Marine Safety Information Bulletin (MSIB) 20-02. Vessels are reminded to utilize navigation lights In Accordance With (IAW) the Convention on the International Regulations for Preventing Collisions at Sea, 1972 (COLREGS) Rule 20 and Rule 20 of The Inland Navigational Rules Act of 1980 (33 C.F.R. 83.20). This notice is specifically addressing commercial vessels transiting with high-intensity "work lights" in navigation corridors around San Francisco Bay. Vessels are encouraged to maintain an active watch and maintain communication on VHF-FM Chan. 13 and 16 and, when the intentions of another vessel are unclear, communicate arrangements to reduce the risk of collision. For more details see enclosure Commercial_FIshing_Vessel_Hazard.pdf.

Chart 18649 LNM: 51/20

NORTHERN CALIFORNIA-SAN FRANCISCO-MILE ROCKS LIGHT-REDUCED NOMINAL RANGE

Mile Rocks Light (LLNR 365) will have a temporarily reduced intensity of 5nm until further notice. Mariners are requested to transit the area with caution. For more details or comments contact LT Ruth Sadowitz at 510-437-3801.

Charts: 18007 18010 18020 18022 18640 18645 18649 18680 LNM: 16/19

SAN DIEGO-SANTA BARBARA-OBSTRUCTION

There is flag pole located in front of Santa Barbara Harbor Breakwater light (LLNR 3750). The flag pole is approximately 8-10 ft away from the aid, extends about 4-5 ft above the light and is at a bearing of 062. There is a possibility that the flagpole may obscure the visibility of the light if mariners are approaching from that bearing. Mariners are requested to transit the area with caution. For more details or comments contact Sector San Diego at 619-278-7000.

LNM: 27/20

SOUTHERN CALIFORNIA-SAN DIEGO-SUBMERGED OBJECT

An anchored 16 ft center console pleasure craft has capsized and remains afloat 600 yds south of Hotel Del Coronado at 32-40-06N 117-10-09W. No Distress is associated with this wreck which has been marked with an unlit red marker buoy in approximately 28 ft of water. Mariners are requested to transit the area with caution. For more details or comments contact Coast Guard Sector San Diego at 619-278-7000.

Chart 18772 LNM: 34/20

SOUTHERN CALIFORNIA-SAN DIEGO-SUBMERGED OBJECT

A large ship anchor and 300 ft of anchor chain have been reported lost in 39 ft of water one nautical mile west of Silver Strand State Beach at 32-38-24N 117-10-08W. Mariners are requested to transit the area with caution. For more details or comments contact sector San Diego at 619-278-7000.

Chart 18773 LNM: 27/20

U.S. Coastal and Internal Waters-U.S. Federal Aids to Navigation-Datum Shift to WGS 84

The positions of Aids to Navigation contained in the U.S. Light List Volumes will be converted to WGS 84 to align with Datum used on Official U.S. Electronic Navigational Charts (ENC) issued by the U.S. Hydrographic Offices (NGA, NOAA, USACE). The positions were previously expressed in NAD 83 Datum to align with U.S. Hydrographic Office(s) paper charts. The 2021 Light List Volumes will contain the adjusted positions. No chart or Light List corrections will be published in the Local Notice to Mariners.

LNM: 49/20

SECTION II - DISCREPANCIES

This section lists all reported and corrected discrepancies related to Aids to Navigation in this edition. A discrepancy is a change in the status of an aid to navigation that differs from what is published or charted.

DISCREPANCIES (FEDERAL AIDS)

LLNR	Aid Name	Status	Chart No.	BNM Ref.	LNM St	LNM End
1	Dart Tsunami Warning Lighted Buoy Station 46412	ADRIFT	18022	SD-0039-18	52/16	
90	Newport Bay West Jetty Light 3	SS INOP	18754	LA-0112-20	45/20	
125	Long Beach Light	LT EXT	18751	LA-0148-20	49/20	
365	Mile Rocks Light	REDUCED INT	18649	SF-0251-17	49/17	
415	Arena Cove Lighted Bell Buoy A	SINKING	18640	HB-0010-20	25/20	
2295	Oceanside Breakwater Light 1	DAYMK MISSING	18758	SD-0020-19	16/19	

2440	Newport Bay West Jetty Light 3	SS INOP	18754	LA-0112-20	45/20
2670	Santa Catalina Island West End Light	LT EXT	18757	LA-0113-19	34/19
3007	Long Beach Channel Pier J Lighted Buoy 2	LT EXT	18751	LA-0007-21	02/21
3012	Long Beach Light	LT EXT	18751	LA-0148-20	49/20
3106	**Los Angeles Approach Channel Lighted Buoy 2**	**LT EXT**	**18749**	**LA-0012-21**	**03/21**
3775	Santa Barbara Harbor Lighted Buoy 7	MISSING	18725	LA-0004-21	02/21
3785	Santa Barbara Harbor Lighted Buoy 11	OFF STA	18725	LA-0154-20	50/20
3970	Monterey Harbor Light 6	SS INOP	18685	SF-0064-20	27/20
4240	Four Fathom Bank Lighted Bell Buoy	MISSING	18649	SF-0007-21	02/21
4245	Mile Rocks Light	REDUCED INT	18649	SF-0251-17	49/17
4330	Harding Rock Lighted Buoy HR	RAC INOP	18650	SF-0151-20	49/20
4370	Raccoon Strait Lighted Buoy 3	OFF STA	18649	SF-0162-20	51/20
4675	Oakland Inner Harbor Light 8	LT EXT	18650	SF-0004-21	01/21
4912	Lash Terminal Approach Lighted Buoy 2	SINKING	18650	SF-0040-20	16/20
5130	San Francisco Bay South Channel Light 8	DAYMK MISSING	18651	SF-0023-20	08/20
5250	Redwood Creek Light 16	STRUCT DMGD/TRLB	18651	SF-0109-19	43/19
5515	San Francisco Bay North Channel Lighted Buoy 14	MISSING	18649	SF-0074-20	29/20
6095	Mare Island Strait Light 2	STRUCT DMGD/TRLB	18655	SF-0152-20	49/20
6165	Napa River Light 8	STRUCT DEST/TRLB	18654	SF-0123-14	34/14
6195	Napa River Light 15	DAYMK MISSING	18654	SF-0036-17	05/17
6506	Suisun Bay Buoy A	BUOY DMGD	18658	SF-0120-20	40/20
6913	Stockton Channel Light 1	STRUCT DMGD	18660	SF-0072-19	23/19
7235	Sacramento River Deep Water Ship Channel Light 15	MISSING/TRLB	18660	SF-0100-20	35/20
7240	Sacramento River Deep Water Ship Channel Light 16	STRUCT DEST/TRLB	18660	SF-0127-18	34/18
8525	Lake Tahoe Buoy AB	DAYMK IMCH	18665	SF-0067-20	27/20

DISCREPANCIES (FEDERAL AIDS) CORRECTED

LLNR	Aid Name	Status	Chart No.	BNM Ref.	LNM St	LNM End

None

DISCREPANCIES (PRIVATE AIDS)

LLNR	Aid Name	Status	Chart No.	BNM Ref.	LNM St	LNM End
20	Ocean Beach Pier Fog Sound Signal	SS INOP	18765	SD-0002-19	05/19	
158	Scripps Waverider Lighted Research Buoy 092	OFF STA	18746		45/18	
1765	Harbor Island East Basin Channel Buoy 2	OFF STA	18773	SD-0028-19	19/19	
1775	Harbor Island East Basin Channel Buoy 4	MISSING	18773	SD-0039-20	29/20	
1790	Harbor Island East Basin Channel Buoy 10	OFF STA	18773	SD-0044-19	27/19	
1900	Glorietta Bay Channel Lighted Buoy 8	LT IMCH	18773		50/18	
2070	Coronado Cays Channel Daybeacon 3	STRUCT DEST	18773	SD-0098-17	36/17	
2288	Scripps Waverider Lighted Research Buoy 220	OFF STA	18765	SD-0041-20	30/20	
2289.1	Scripps Waverider Lighted Research Buoy 100	OFF STA	18765		22/20	
2289.4	Scripps "CORDC" Lighted Research Buoy	MISSING	18765		22/20	
2871	**Long Beach Harbor Brusco Lighted Mooring Buoy**	**LT EXT**	**18751**	**LA-0009-21**	**03/21**	

3339.2	REDONDO HARBOR LIGHT	LT EXT	18744	LA-0181-18	52/18
3420	Hyperion Lighted Gong Buoy 10 ES	LT EXT	18744		16/20
3972.1	Monterey Harbor Junction Lighted Buoy A	MISSING	18685	SF-0019-20	05/20
4401	Richardson Bay Daybeacon 8	DAYMK DMGD	18653		15/20
4402	Richardson Bay Daybeacon 9	STRUCT DMGD	18649	SF-0086-18	23/18
4465	San Francisco - Oakland Bay Bridge Pier G Fog Signal	SS INOP	18650	SF-0088-20	32/20
4578	South Beach Harbor South Entrance Light 1	LT EXT	18650	SF-0091-20	33/20
4826	Bay Farm Island Light 1	LT EXT	18650	SF-0014-19	05/19
4826.15	Bay Farm Island Light 3	LT EXT	18650	SF-0014-19	04/19
4827.1	Anchorage 9 Lighted Mooring Buoy A	LT EXT	18650	SF-0012-20	04/20
4828.1	Anchorage 9 Lighted Mooring Buoy B	LT EXT	18650	SF-0013-20	04/20
5661	Southampton Shoal Outfall Lighted Buoy 1	LT EXT	18653	SF-0029-20	10/20
5661	Southampton Shoal Outfall Lighted Buoy 1	LT EXT/RAC INOP	18653	SF-0026-19	07/19
5877.2	San Rafael Rock Quarry Mooring Buoy C	MISSING	18653		36/18
6623	New York Slough Koch West Light	LT IMCH	18659		39/18
6624	New York Slough Koch East Light	LT EXT	18659		39/18
6645.5	Delta Diablo Outfall Lighted Buoy	BUOY DMGD	18659		39/18

DISCREPANCIES (PRIVATE AIDS) CORRECTED

LLNR	Aid Name	Status	Chart No.	BNM Ref.	LNM St	LNM End

None

PLATFORM DISCREPANCIES

Name	Status	Position	BNM Ref.	LNM St	LNM End

None

PLATFORM DISCREPANCIES CORRECTED

Name	Status	Position	BNM Ref.	LNM St	LNM End

None

SECTION III - TEMPORARY CHANGES and TEMPORARY CHANGES CORRECTED

This section contains temporary changes and corrections to Aids to Navigation for this edition. When charted aids are temporarily relocated for dredging, testing, evaluation, or marking an obstruction, a temporary correction shall be listed in Section IV giving the new position.

TEMPORARY CHANGES

LLNR	Aid Name	Status	Chart No.	BNM Ref.	LNM St	LNM End
280	Point Sur Light	Reduced Intensity	18686	SF-0105-20	35/20	
3775	Santa Barbara Harbor Lighted Buoy 7	RELOCATED FOR DREDGING	18725	LA-0057-20	16/20	
3785	Santa Barbara Harbor Lighted Buoy 11	RELOCATED FOR DREDGING	18725	LA-0058-20	16/20	
3792	Santa Barbara Harbor Lighted Buoy 12	RELOCATED FOR DREDGING	18725	LA-0059-20	16/20	
6665	San Joaquin River Daybeacon 1	TRUB	18659	SF-0075-20	30/20	

TEMPORARY CHANGES CORRECTED

LLNR	Aid Name	Status	Chart No.	BNM Ref.	LNM St	LNM End

None

PLATFORM TEMPORARY CHANGES

Name	Status	Position	BNM Ref.	LNM St	LNM End

None

PLATFORM TEMPORARY CHANGES CORRECTED

Name	Status	Position	BNM Ref.	LNM St	LNM End

None

SECTION IV - CHART CORRECTIONS

None

SECTION V - ADVANCE NOTICES

This section contains advance notice of approved projects, changes to aids to navigation, or upcoming temporary changes such as dredging, etc. Mariners are advised to use caution while transiting these areas.

SUMMARY OF ADVANCED APPROVED PROJECTS

Approved Project(s)	Project Date	Ref. LNM

None

Advance Notice(s)

SOUTHERN CALIFORNIA-ANAHEIM BAY-TEMPORARY CHANGE

The U.S. Coast Guard will temporarily change the following aids to floating aids in regards to the Anaheim Bay Project:
Anaheim Bay Channel Light 9 LLNR (2820)
Anaheim Bay Channel Light 10 LLNR (2825)
Anaheim Bay Channel Light 11 LLNR (2826)
Anaheim Bay Channel Light 13 LLNR (2827)
Anaheim Bay Channel Light 17 LLNR (2829)
For more details or comments contact LT Ruth Sadowitz at 510-437-3801 or ruth.a.sadowitz@uscg.mil.

Chart 18749 LNM: 15/20

SOUTHERN CALIFORNIA-NEWPORT BAY CHANNEL-AID CONVERSION

The U. S. Coast Guard is proposing to make the temporary buoy for Newport Bay Channel Light 11 (LLNR 2470) a permanent buoy. For more details or comments contact LT Ruth Sadowitz, 510-437-3801 or ruth.a.sadowitz@uscg.mil.

Chart 18754 LNM: 46/19

SECTION VI - PROPOSED CHANGES

Periodically, the Coast Guard evaluates its system of aids to navigation to determine whether the conditions for which the aids to navigation were established have changed. When changes occur, the feasibility of improving, relocating, replacing, or discontinuing aids are considered. This section contains notice(s) of non-approved, proposed projects open for comment. SPECIAL NOTE: Mariners are requested to respond in writing to the District office unless otherwise noted (see banner page for address).

PROPOSED WATERWAY PROJECTS OPEN FOR PUBLIC COMMENT

Proposed Project(s)	Closing	Docket No.	Ref. LNM

None

Proposed Change Notice(s)

CALIFORNIA-HALF MOON BAY-PILLAR POINT HARBOR-SOUND SIGNAL

The U.S. Coast Guard is seeking data on the effectiveness and importance of the Pillar Point Harbor Entrance Light and Sound Signal, Light List number 4145, located on the eastern end of the western Pillar Point Harbor break-wall in position 37-29-38.473N 122-29-04.948W. Comments concerning this Aid to Navigation can be sent to Sector San Francisco Waterways Safety, CWO Price, Mickey.T.Price@uscg.mil.

Chart 18682 LNM: 50/20

SECTION VII - GENERAL

This section contains information of general concern to the Mariners. Mariners are advised to use caution while transiting these areas.

2021 COAST GUARD LIGHT LIST AVAILABILITY

2021 Light Lists are available on the USCG Navigation Center's website at: http://www.navcen.uscg.gov/?pageName=lightLists. Coast Guard Light

2021 COAST GUARD LIGHT LIST AVAILABILITY

Lists are a means for communicating aids to navigation information to the maritime public. Local Notice to Mariners will continue to advise Light List corrections and NAVCEN will continue to publish a compilation of corrections. Complete versions of the 2021 Light Lists are updated weekly on the NAVCEN website and mariners should download applicable copies and updates as needed at:
http://www.navcen.uscg.gov/?pageName=lightListWeeklyUpdates. A summary of weekly 2021 Light List corrections are available at:
https://www.navcen.uscg.gov/?pageName=lightListCorrections.

LNM: 03/21

ARIZONA-BULLHEAD CITY-COLORADO RIVER-DAVIS DAM

A rocky shoal has been reported below the Davis Dam in position 35-11-34N 114-34-16W where depths are reported between 5' to less than 1' depending upon the outflow from the dam. Recreational vessels have been seen running aground after making contact with the rocks as there are no signs or buoys marking the area. Mariners are requested to transit the area with caution. For more details or comments contact USCG Sector San Diego at 619-278-7073.

LNM: 16/18

ARIZONA-COLORADO RIVER-BRIDGE

CIBOLA FARMERS BRIDGE-La Paz County is rehabilitating the bridge Monday through Friday during daylight hours, through 12 Aug 21. A temporary underdeck platform has been installed under span 3 reducing vertical clearance in that span by 4 feet. The main navigational channel is temporarily established in span 4, providing 17 feet vertical clearance over ordinary high water and 48 feet horizontal clearance between piers. Span 4 is marked with upstream and downstream green center channel lights and red pier lights. The upstream and downstream lower edges of the temporary underdeck platform is lighted at night with steady burning red lights (see Cibola_Alternate_Channel.pdf at the end of this notice). Mariners are requested to transit the area with caution. For conditions at the bridge project site mariners can contact 928-210-1913 or 928-897-1151. For more details or comments, contact the Coast Guard Bridge Office at 510-437-3461.

LNM: 40/20

NORTHERN CALIFORNIA-CORDELL BANK-SURVEY OPERATIONS

NOAA has deployed two research moorings in the following positions:
38-03-03N 123-27-24W
34-03-24N 123-29-09W
These are orange mooring buoys that have a flat surface float, flagpole, flag, and radar reflector. R/V MUSSEL POINT will be monitoring VHF-FM Chan. 16. Mariners are requested to transit the area with caution. For more details or comments contact Danielle Lipski at 415-464-5264.

Charts: 18010 18645 LNM: 52/18

NORTHERN CALIFORNIA-CORTE MADERA CREEK-BRIDGE

BON AIR RD BRIDGE REPLACEMENT-Construction of the replacement bridge continues. A temporary work trestle spans the channel and provides 20' of horizontal clearance, pile to pile, and 3' of vertical clearance from mean high water to the lowest hittable portion of the trestle (see BonAirRd_Trestle.pdf at the end of this notice for navigation channel location). Four cofferdams have been placed within the creek to facilitate construction of the replacement bridge piers. Work will be conducted Monday through Saturday from 0700-1800. Mariners are requested to transit the area with caution. For conditions at the construction site, mariners can contact the contractor at 925-953-4610/916-919-2428 or the city at 415-259-7050. For more details or comments contact the Coast Guard Bridge Office at 510-437-3516.

Chart 18649 LNM: 41/18

NORTHERN CALIFORNIA-DELTA & RIVERS-AMERICAN RIVER-BRIDGE

DOWNSTREAM CA ROUTE 160 BRIDGE-Caltrans has completed replacement of the rock slope scour protection at each in-water pier. The scour slopes ~25 feet from the pier face into the navigation channel (See CA_RT_160_PierScourProtection.pdf drawing at the end of this notice for details.) Mariners should use the center of the navigation channel when transiting the bridge. For further information contact the Coast Guard Bridge Office at 510-437-3516.

Chart 18662 LNM: 42/20

NORTHERN CALIFORNIA-DELTA & RIVERS-MIDDLE RIVER-BRIDGE

WOODWARD ISLAND BRIDGE-The Coast Guard has changed the operating schedule that governs the new removable span bridge. The final rule establishes the following: 33 CFR 117.171 (c) - The removable span of the Woodward Island Bridge, mile 11.8 near Discovery Bay, shall be removed as soon as possible upon notification by the District Commander that an emergency exists which requires its removal.

This final rule is effective 10 Feb 21. For full details concerning this final rule, published on 11 Jan 21, go to www.federalregister.gov and type in USCG-2021-0137 in the search bar. For further information contact the Coast Guard Bridge Office at 510-437-3516.

Chart 18661 LNM: 02/21

NORTHERN CALIFORNIA-DELTA & RIVERS-MOKELUMNE RIVER-BRIDGE

I-5 DUAL BRIDGE-Caltrans' contractor has installed three temporary trestles to facilitate retrofit of the dual bridge, one upstream, one downstream and one between the dual bridge. The temporary trestles provide ~9 feet of vertical clearance from Mean High Water to low steel of each trestle and 30 feet of horizontal clearance between bents 2 and 3. The vertical clearance can fluctuate due to changes in the water surface elevation caused by runoff, snowmelt and dam releases. The upstream and downstream temporary navigation span, between bents 2 and 3, are lighted at night with steady burning green lights. The upstream and downstream faces of bents 1, 2, 3 and 4 are lighted at night with steady burning red lights (See I-5_MokeRiver_Trestles.pdf at the end of this notice for lighting diagram.) Work is being conducted Monday through Friday, 0600 to 1530,through 21 Jul 21. For information at the construction site mariners can contact 916-208-6416, 209-518-6936, 916-283-9949, 916-757-2989 or 530-409-8103. Mariners are requested to use extreme caution when transiting the work site as there will be cranes working over the channel. For further information, mariners can contact the Coast Guard Bridge Office at 510-219-4366.

Chart 18662 LNM: 37/20

NORTHERN CALIFORNIA-DELTA & RIVERS-PETALUMA RIVER-BRIDGE

SMART BLACKPOINT RAILROAD DRAWBRIDGE-The upstream fender system protecting the swing span has been destroyed and does not offer protection for vessels or the bridge. Mariners are urged to use caution while transiting the bridge. For more details or comments contact the Coast Guard Bridge Office at 510-437-3516.

NORTHERN CALIFORNIA-DELTA & RIVERS-PETALUMA RIVER-BRIDGE

Chart 18654 LNM: 35/20

NORTHERN CALIFORNIA-DELTA & RIVERS-SACRAMENTO RIVER-BRIDGE

ELKHORN FERRY (I-5) BRIDGE-The upstream clearance gauge is missing. For more details or comments contact the Coast Guard Bridge Office at 510-437-3514.

Chart 18664 LNM: 13/19

NORTHERN CALIFORNIA-DELTA & RIVERS-SACRAMENTO RIVER-BRIDGE

RIO VISTA DRAWBRIDGE-TRAFFIC GATE INSTALLATION-Temporary platforms are installed beneath low steel of the bridge in spans 2 and 8 reducing vertical clearance in those spans by no more than 4 feet. The upriver and downriver temporary platforms and associated support cables are lit at night with steady burning red lights (see RVBridge_PlatformCable_Lighting.pdf enclosure at the end of this notice.) At no time will the lift span of the bridge be impacted. Mariners are urged to use alternate spans of the bridge. For conditions at the bridge, mariners can contact the contractor at 925-260-2104 or 925-260-1884. For further information contact the Coast Guard Bridge Office at 510-437-3516.

Chart 18661 LNM: 45/20

NORTHERN CALIFORNIA-DELTA & RIVERS-SACRAMENTO RIVER-BRIDGE

PAINTERSVILLE DRAWBRIDGE-Retrofit of the bridge is complete and all in-water equipment has been removed from the construction site. Reinstallation of the dolphins is complete but due to COVID the contractor cannot install the red dolphin lights until further notice. Temporary red lights on the upriver and downriver navigation span bridge piers will remain until dolphins are lit. (See Temp_Lighting_Paintersville.pdf at the end of this notice for temporary pier lighting.) Mariners are urged to use the center of the double leaf bascule span when transiting the bridge. Contact the Coast Guard Bridge Office at 510-437-3516 for updates.

Chart 18662 LNM: 50/20

NORTHERN CALIFORNIA-DELTA & RIVERS-SACRAMENTO RIVER-BRIDGE

"I" STREET BRIDGE-The swing span of the bridge is secured in the closed-to-navigation position due to electrical damage. Repairs are in progress and are anticipated to be completed by 25 Jan 20. The navigation span of the bridge provides 30 ft of vertical clearance from mean high water when closed. Vessels able to transit the bridge while closed can continue to do so at any time. For further information contact the Coast Guard Bridge Office at 510-437-3516.

Chart 18662 LNM: 01/21

NORTHERN CALIFORNIA-HUMBOLDT BAY-HAZARD TO NAVIGATION

On 25 Nov 20 at 1310, six 40' containers were lost overboard from the cargo vessel MSC ROMANE at 40-49-02N 124-50-06W. Mariners are requested to transit the area with caution and are encouraged to report any sightings of these containers to the nearest Coast Guard Command Center.

Chart 18620 LNM: 48/20

NORTHERN CALIFORNIA-HUMBOLDT BAY-HAZARDOUS CONDITIONS

Humboldt Bay entrance is observing a reduced deep draft limit to 34′ based on a +6′ tide until maintenance dredging can be performed. Hazardous conditions with breaking surf and heavy shoaling have been observed in the vicinity of Humboldt Bay Lighted Buoy 9 (LLNR8195). Mariners are requested to transit the area with caution and contact U.S. Coast Guard Sector Humboldt Bay on VHF-FM Chan. 16 for assistance. For more details or comments contact U.S. Coast Guard Sector Humboldt Bay at 707-839-6113.

Chart 18622 LNM: 50/18

NORTHERN CALIFORNIA-HUMBOLDT BAY-SUBMERGED BUOY

Two partially submerged spherical orange NOAA buoys last seen at 40-40-27N 124-28-00W in the NW corner of Eel Canyon are now missing with current location unknown. Mariners are requested to transit the area with caution and report any sightings to U.S. Coast Guard. For more details or comments contact Coast Guard Sector Humboldt Bay at 707-839-6113.

Chart 18620 LNM: 45/20

NORTHERN CALIFORNIA-LAKE TAHOE-WAMS

The U. S. Coast Guard is conducting a Waterways Analysis Management System (WAMS) survey of Lake Tahoe which will remain open until 15 Apr 21. Anyone interested in participating can do so by using the following link:
https://www.research.net/r/LakeTahoeWAMS. This questionnaire seeks to obtain data on the effectiveness of the system of Aids to Navigation in Lake Tahoe, as well as other waterway safety concerns. This Coast Guard will use this information to ensure that the aids are serving their intended purpose. The Coast Guard also uses the concerns of waterways users to assist with other or future waterway management decisions. Any interested company or individual wishing to provide recommendations on existing or additional aids to navigation in this area are welcome to participate by submitting a user survey. To receive further information, contact District 11 Waterways, LTJG LaMartina at Gabriel.W.LaMartina@uscg.mil.

Chart 18665 LNM: 02/21

NORTHERN CALIFORNIA-MIDDLE RIVER-POTENTIAL OBSTRUCTION TO NAVIGATION

There is a potential obstruction to navigation in the Middle River at the entrance to Empire Cut at 37-58-18N 121-31-18W. The obstruction is a partially submerged metal pipe. Mariners are requested to transit the area with caution. For more details or comments contact LT Emily Rowan at 415-399-7443.

Chart 18661 LNM: 46/19

NORTHERN CALIFORNIA-OFFSHORE MONTEREY BAY-BUOY DEPLOYMENT

University of California, San Diego and the U.S. Army Corps of Engineers have deployed Lighted Waverider Research Buoy Station 029 (LLNR 5791) in position 37-56-12N 123-27-46W, approximately 22 nm west off Pt. Reyes, CA. The buoy is a 3' diameter sphere with an attached telemetry whip antenna and Fl (5) Y 20s light characteristic, the buoy is painted yellow and is marked "Wave Buoy". For more details or comments contact James Behrens at 858-534-3032.

Chart 18010 LNM: 44/19

NORTHERN CALIFORNIA-OFFSHORE MONTEREY BAY-BUOY DEPLOYMENT

NOAA has deployed two research buoys at the following coordinates:
36-07-03N 125-08-00W
36-01-40N 125-06-21W
These are 3' yellow octagonal research buoys with Fl W 4s light characteristics. Mariners are requested to transit the area with caution. For more details or comments contact Danny Devereaux at 206-526-6177.

Charts: 501 18010 18020 18022 LNM: 37/19

NORTHERN CALIFORNIA-PETALUMA RIVER-HAZARD TO NAVIGATION

A barge is partially submerged and extending from the Southern bank of the Petaluma River approximately .75NM west of the highway 101 bridge in Petaluma, CA. The barge is blocking approximately 85% of the Petaluma River and has been marked with a green buoy at 38-13-43N 122-37-11W, labeled "WR7" with Fl Q G light characteristics. Mariners are requested to transit the area with caution. For more details or comments contact Coast Guard Sector San Francisco Waterways Safety at 510-612-9729.

Chart 18654 LNM: 02/21

NORTHERN CALIFORNIA-PINOLE SHOAL-SHOALING

Pinole Shoal is observing a reduced deep draft on the south side edge of the channel in limited areas to 32.9' until maintenance dredging can be performed. For detail information on depths and locations please see https://www.spn.usace.army.mil/Missions/Surveys-Studies-Strategy/Hydro-Survey/Pinole-Shoals-Channel/ for the Army Corp Hydro Survey. Mariners are requested to transit the area with caution. For more details or comments contact D11 Waterways Management at 510-437-2980.

Charts: 18654 18655 LNM: 05/19

NORTHERN CALIFORNIA-POINT PINOS

Point Pinos Light (LLNR 290) emergency light is temporarily unavailable, however the main light is functioning properly. For more details or comments contact Sector San Francisco at 510-437-3454

LNM: 50/20

NORTHERN CALIFORNIA-RICHARDSON BAY-MARINE CONSTRUCTION

Salt River Construction Corporation will be assisting with marine construction at a private residence in Richardson Bay, CA until 20 Dec 21. M/B YC42, C/B ALASKA, C/B MINK, along with the tug BRANDY BAR will be conducting operations. A mooring location will be located at 37-51-57N 122-27-54W. All vessels will monitor VHF-FM Chan. 13, 14, and 77. Mariners are requested to transit the area with caution. For more details or comments contact Rick Moseley at 415-435-1024.

Charts: 18649 18653 LNM: 50/19

NORTHERN CALIFORNIA-SACRAMENTO RIVER-REDUCED VERTICAL CLEARANCE

Overhead power cables upstream of Sacramento River at 38-03-54N 121-47-09W have a reported reduced vertical clearance to 119.5'.

Chart 18660 LNM: 22/16

NORTHERN CALIFORNIA-SAN FRANCISCO BAY-ANCHORAGE 8-HAZARD TO NAVIGATION

A derelict underwater electrical cable has been reported to foul anchors in Anchorage 8 near the following coordinates 37-47-35N 122-21-29W. For more details or comments contact USCG Sector San Francisco Waterways Management at SFWaterways@uscg.mil.

Chart 18649 LNM: 02/21

NORTHERN CALIFORNIA-SAN FRANCISCO BAY-BRIDGE

SAN MATEO/HAYWARD BRIDGE-Structural repairs to the superstructure of the bridge are being conducted from 0700 to 1530, Monday through Friday, through 15 May 22. Current location of work is at piers 21, 22, 23, and 25. At no time will work be conducted or floating equipment placed in the main navigation span of the bridge, piers 19-20. Various size barges will be used during the project, the largest being a 100' X 20' flexifloat barge. During the work day, barges will either be spudded down or tied to the bridge piers, no anchors or anchor line will be utilized. After regular working hours, the unmanned barge will be left on-site unless inclement weather is anticipated, then the barges will be spudded down at pier 12, west of the main navigation span. For the safety of navigation, the barges can be moved with one-hour advance notice. For conditions at the bridge mariners can contact Golden State Bridge, Inc., on VHF-FM Marine Radio Channels 13, 14, and 16 or by cell phone at 707-246-0725, 925-260-2104, or 925-382-7288. For more details or comments contact the Coast Guard Bridge Office at 510-219-4366.

Chart 18651 LNM: 01/21

NORTHERN CALIFORNIA-SAN FRANCISCO BAY-BRIDGE

GOLDEN GATE BRIDGE-Four 54' temporary under deck platforms; one 475' and one 2025' north of the south tower and one 175' and one 2025' south of the north tower have been installed at the bridge. Temporary platforms reduce vertical clearance at the bridge by no more than 14'. As the work progresses, the two outer platforms will be moved towards the towers and the two inner platforms moved towards the centerline of the bridge. The bridge's maintenance travelers are in use during the project and will remain outboard of the furthest north and furthest south temporary platforms. The temporary platforms and maintenance travelers are lighted at night with all-round red lights (see PlatformLighting_GG_Bridge_09Nov20.pdf at the end of this notice). For navigational safety the maintenance travelers can be moved by contacting the Golden Gate Bridge at 415-923-2220. Work is being conducted Monday through Saturday, 0700-1700 and 2100-0500. For conditions at the bridge, mariners can contact the contractor at 415-716-0384. For more details or comments contact the Coast Guard Bridge Office at 510-437-3516.

Chart 18649 LNM: 45/20

NORTHERN CALIFORNIA-SAN FRANCISCO BAY-DETERIORATING CONCRETE PILINGS

Deteriorating concrete pilings above and below the waterline are present in the vicinity of the the south edge of Southampton Shoal Light (LLNR 5480). Mariners are requested to transit the area with caution. For more details or comments contact LT Ruth Sadowitz at 510-437-3801 or ruth.a.sadowitz@uscg.mil.

Chart 18649 LNM: 23/15

NORTHERN CALIFORNIA-SAN FRANCISCO BAY-ISLAIS CREEK-BRIDGE

NORTHERN CALIFORNIA-SAN FRANCISCO BAY-ISLAIS CREEK-BRIDGE

THIRD STREET DRAWBRIDGE- The drawspan is secured in the closed-to-navigation position due to structural damage. The bridge provides 4ft vertical clearance above mean high water when closed. Vessels that can safely transit the bridge while in the closed position may continue to do so at any time.

Chart 18650 LNM: 49/20

NORTHERN CALIFORNIA-SAN FRANCISCO BAY-ISLAIS CREEK-BRIDGE

ILLINOIS STREET BRIDGE-All red navigation lights on the bridge are extinguished. Estimated time of repair, unknown. For further information contact the Coast Guard Bridge Office at 510-437-3516.

Chart 18649 LNM: 01/21

NORTHERN CALIFORNIA-SAN FRANCISCO BAY-OAKLAND INNER HARBOR-SHOALING

Shoaling has been reported on the south side of Oakland Inner Harbor South Channel in the east passage through the Fruitvale Ave. Bridge. Mariners are requested to transit the area with caution and report any observed changes in shoaling conditions to the San Francisco VTS on VHF-FM Chan. 14. For more details or comments contact U.S. Coast Guard Sector San Francisco Waterways Management at 415-399-7443.

Chart 18650 LNM: 16/15

NORTHERN CALIFORNIA-SAN FRANCISCO BAY-PETALUMA RIVER

Shoaling has been reported east of Petaluma River Entrance Channel Daybeacon 3 (LLNR 5985) in position 38-03-33N 122-27-06W. Shoaling has been reported to be as shallow as 6" up to 15 yds east of the aid. Mariners are requested to transit the area with caution. For more details or comments contact LT Ruth Sadowitz at 510-437-3801 or ruth.a.sadowitz@uscg.mil.

Chart 18654 LNM: 41/18

NORTHERN CALIFORNIA-SAN FRANCISCO-GEOPHYSICAL SURVEY

USGS Pacific Coastal and Marine Geology Science Center (PCMSC) is conducting geophysical surveys in the vicinity of Ocean Beach in San Francisco, CA until 30 Apr 21 during daylight hours. Operations will be bounded by the following coordinates:
37-46-36N 127-31-47W
37-42-34N 122-31-47W
37-46-36N 122-30-11W
37-42-34N 122-30-11W
A bathymetric survey utilizing two personal watercraft will be used to conduct operations and they will be monitoring VHF-FM Chan. 16 and 83a. Mariners are requested to transit the area with caution. For more details or comments contact Tim Elfers at 831-460-7479.

Charts: 18640 18645 LNM: 43/20

NORTHERN CALIFORNIA-SAN FRANCISCO-GEOPHYSICAL SURVEY

The USGS Pacific Coastal and Marine Science Center is conducting a series of up to five one-day near shore geophysical surveys and up to three rapid-response surveys in Monterey Bay, CA until 01 Nov 21. A bathymetric survey using a two personal watercraft, each equipped with a 200 kHz single beam echo sounder, will be used to conduct cross shore transects from within the surf zone out to 1200m from shore to document the effects of large wave events on seafloor morphology. For more details or comments contact Tim Elfers at 831-460-7479.

Charts: 18680 18685 LNM: 07/20

NORTHERN CALIFORNIA-SAN JOAQUIN RIVER-MARINE CONSTRUCTION

Shimmick Construction Company, Inc. (SCCI) is conducting marine construction for the Smith Canal Gate Project in the San Joaquin Deep Water Shipping Channel from 0600 to 1800 Monday through Saturday until 30 Nov 22. Operations will be conducted between the following coordinates:
37-57-31N 121-21-11W
37-57-25N 121-21-08W
Staging Yard
37-57-09N 121-19-55W
Mariners are requested to transit the area with caution. For more details or comments contact Tyler Shell at 510-393-0308.

Charts: 18661 18663 LNM: 28/20

NORTHERN CALIFORNIA-SAN LEANDRO BAY-BRIDGE

BAY FARM ISLAND HIGHWAY BRIDGE-The south side lower slat on the fender system is missing. Mariners are urged to transit the bridge with caution. The bridge owner is in the process of designing a replacement pier protection system. For more details or comments contact the Coast Guard Bridge Office at 510-437-3514.

Chart 18649 LNM: 37/18

NORTHERN CALIFORNIA-SAN PABLO BAY-SUBMARINE CABLE

Trans Bay Cable LLC owns and operates a charted submarine cable that experiences intermittent exposures in San Pablo Bay. All vessels are advised not to anchor, use ground tackle, fish, or dredge in the vicinity of 38-03-27N 122-16-22W as this increases the risk of damage violating 47 USC 2. Mariners are requested to transit the area with caution. For more details or comments contact Trans Bay Cable Operations Center at operator@transbaycable.com or 925-427-9744.

Charts: 18654 18655 LNM: 25/20

NORTHERN CALIFORNIA-SAN PABLO BAY-SUBMERGED OBSTRUCTION

There are submerged piles partially exposed above the sediment surface south of Pinole Shoal Channel along the 30' contour between 38-03-14N 122-16-26W and 38-03-18N 122-16-15W. The piles are present along the slope of the natural shoal at heights ranging from approximately 1' to 5' above the sediment surface. For more details or comments contact Todd Muelhoefer of Coscol Petroleum Corporation at 719-520-4761.

Charts: 18654 18655 LNM: 47/17

NORTHERN CALIFORNIA-SANTA CRUZ HARBOR-SHOALING

There are hazardous and shoaled conditions in the Santa Cruz Harbor Channel Entrance. Mariners transiting the Santa Cruz Harbor should use caution for hazardous conditions of breaking surf and shoaling in the Santa Cruz Harbor entrance that may occur during all surf and tidal conditions.

NORTHERN CALIFORNIA-SANTA CRUZ HARBOR-SHOALING

Mariners are highly advised not to transit the Santa Cruz Harbor Channel unless sea and tide conditions are suitable for your vessel's draft. Mariners may view soundings on the Santa Cruz Harbor at https://www.santacruzharbor.org/entrance-soundings. For more details or comments contact the Santa Cruz Harbor at 831-475-6161 or VHF-FM Chan. 9 and 16.

Chart 18685 LNM: 03/21

NORTHERN CALIFORNIA-SANTA CRUZ-BUOY DEPLOYMENT

California Department of Parks and Recreation and USACE have deployed the National Data Buoy Center 46269, Station 254 waverider buoy in position 36-56-03N 122-02-02W, approximately 1 NM off Point Santa Cruz, CA. The buoy is a 3' diameter sphere with an attached telemetry whip antenna and Fl (5) Y 20s light characteristic, the buoy is painted yellow and is marked "Wave Buoy". For more details or comments contact James Behrens at 858-534-3032.

Chart 18685 LNM: 49/20

NORTHERN CALIFORNIA-SANTA CRUZ-DREDGE OPERATIONS

The Santa Cruz Port District will conduct dredge operations at the entrance to Santa Cruz Harbor, CA, from 0700-1600 until 30 Apr 20. A temporary yellow anchorage buoy with a light characteristic of F Y will be utilized outside of the navigational channel at 36-57-39N 122-00-00W. Dredge TWIN LAKES will monitor VHF-FM Chan. 08, 09, and 16. Mariners are requested to transit the area with caution and minimize wake in the vicinity of the dredge. For more details or comments contact Santa Cruz Harbor on VHF-FM Chan. 09 and 16 or at 831-475-6161.

Chart 18685 LNM: 44/20

NORTHERN CALIFORNIA-SANTA CRUZ-HAZARDOUS CONDITIONS

Santa Cruz Harbor is cautioning mariners of possible hazardous conditions with breaking surf and shoaling that may occur at Santa Cruz Harbor Entrance due to high surf and extreme tidal conditions in the vicinity of 36-57-37N 122-00-06W. Mariners are requested to transit the area with caution. For more details or comments contact Santa Cruz Harbor on VHF-FM Chan. 09 and 16 or at 831-475-6161.

Chart 18685 LNM: 46/17

NORTHERN CALIFORNIA-SOUTH SAN FRANCISCO BAY-WAMS

The U. S. Coast Guard is conducting a Waterways Analysis Management System (WAMS) study of the South San Francisco Bay until 25 Jan 21 and can be found by using the following link:
https://www.surveymonkey.com/r/SouthSFWAMS. This questionnaire seeks to obtain data on the effectiveness of the system of Aids to Navigation in the South San Francisco Bay, as well as other waterway safety concerns. This Coast Guard will use this information to ensure that the aids are serving their intended purpose. The Coast Guard also uses the concerns of waterways users to assist with other or future waterway management decisions. Any interested company or individual wishing to provide recommendations on existing or additional aids to navigation in this area are welcome to participate by submitting a user survey. To receive further information, contact District 11 Waterways, LTJG LaMartina at Gabriel.W.LaMartina@uscg.mil.

Charts: 18649 18651 LNM: 42/20

NORTHERN CALIFORNIA-SOUTHERN CALIFORNIA-MONTEREY BAY-CHANNELS ISLANDS-SUB-SURFACE OCEANOGRAPHIC INSTRUMENT MOORING

The United States Navy, Naval Postgraduate School, Oceanography Department have deployed sub-surface oceanographic instrument moorings until 01 Nov 21. These sub-surface moorings are part of the Monterey Bay and Channel Islands Sound Scape Monitoring Project. These sub-surface moorings are located at the following coordinates:
36-47-53N 121-58-34W
36-38-53N 121-54-30W
34-02-38N 121-54-30W
34-05-08N 120-31-24W
33-50-56N 120-07-06W
34-01-06N 119-19-00W
36-22-13N 122-18-53W
Mariners are requested to transit the area with caution. For more details or comments contact Keith Wycoff at 831-656-2567.

Charts: 18685 18700 18720 LNM: 48/18

NORTHERN CALIFORNIA-SUISUN MARSH-BOAT LOCKS

The California Department of Water Resources have installed flashboards across the maintenance channel at the Suisun Marsh Salinity Control Structure, located 2.2 nm from the easterly end of Montezuma Slough at 38-05-36N 121-53-07W. The boat lock will operate daily from 0700-1700 until 31 May 21. Signs and lights are currently posted to warn vessels to avoid the use of the maintenance channel on the east side of the facility. The boat lock signal is a standard traffic light. Whistle signals to request opening are two prolonged blasts followed by two short blasts. VHF-FM Chan. 13 will be monitored during hours of operation. The boat lock is located on the east side of the channel and provides the following clearances: 16 feet horizontally; 9' over the sill at MLLW; 70' in length between sector gates; and no vertical impairment. The piers will be marked by fixed red lights, and other parts of the structure will be marked by fixed yellow lights. Mariners should be aware a shoal area exists along the east bank on both sides of the structure extending approximately 50' out from the existing levee. Marker buoys have been placed to identify the area. Mariners are requested to transit the area with caution and be advised that the Salinity Control Structure operations can at times create currents at the site greater than currents in other areas of Montezuma Slough. For more details or comments contact Reza Shahcheraghi at 916-574-2299.

Chart 18656 LNM: 36/20

SOUTHERN CALIFORNIA-CARLSBAD-DREDGE OPERATIONS

Pacific Dredge & Construction will be conducting dredge operations at 33-08-40N 117-20-27W 12 hours a day until 19 Mar 21. The Dredge SANDPIPER will be connected to a floating pipeline which may be up to 1,500 feet long. A High Voltage Power cable will connect the dredge to the Power Barge. Dredge SANPIPER will be assisted by anchor boat KATHLEEN as well as multiple work skiffs and will be monitoring VHF-FM Chan. 06 and 16. Mariners are requested to transit the area with caution and avoid anchoring in the vicinity of the dredge operation. For more details or comments contact Matt Scullard at 619-548-8957.

Chart 18774 LNM: 01/21

SOUTHERN CALIFORNIA-CATALINA ISLAND-BIOMASS RESEARCH

SOUTHERN CALIFORNIA-CATALINA ISLAND-BIOMASS RESEARCH

Marine BioEnergy INC. will be deploying a yellow research buoy with the characteristics of Fl Y 4s at 33-28-12N 118-29-33W and will remain at this position until 30 Jun 21. Mariners are urged to transit at their slowest safe speed to minimize wake and proceed with caution. For more details or comments contact Cindy Wilcox at 818-952-6018.

Chart 18757 LNM: 44/20

SOUTHERN CALIFORNIA-CATALINA ISLAND-BUOY DEPLOYMENT

Marine BioEnergy Inc. has deployed a temporary buoy near Catalina Island at 33-28-13N 118-29-33W. This will be a 7' yellow buoy with Fl Y 4s light characteristic. Mariners are urged to transit at their slowest safe speed to minimize wake, and proceed with caution after passing arrangements have been made. For more details or comments contact Cindy Wilcox at 818-653-9017 or 818-952-6018.

Charts: 18746 18757 LNM: 47/19

SOUTHERN CALIFORNIA-CONSTRUCTION-SAN DIEGO-SAN DIEGO BAY

Manson Construction Co. is conducting construction activities in San Diego Bay at Naval Base San Diego Pier 8. This project includes demolition of the existing Pier 8 and rebuilding the Pier 8 replacement which will involve pile driving and pier construction utilizing derrick barges and flat barges. The approximate location of the project is 32-40-23N, 117-07-21W. This project is expected to be completed by 21 Apr 21. During construction operations, vessel operators with Manson Construction Co. can be contacted on VHF frequencies 13, 16, and 67. Mariners are requested to transit at their slowest safe speed to minimize wake while in the vicinity of construction operations and proceed with caution after passing arrangements have been made. For more details or comments contact Mr. Jack Fernandez at 904-495-4835.

Chart 18773 LNM: 20/20

SOUTHERN CALIFORNIA-DEL MAR NEARSHORE-BUOY DEPLOYMENT

Scripps Institution of Oceanography have deployed a buoy 1200 yds off the coast of Del Mar, CA at 32-57-23N 117-16-46W. The wave buoy is a 3' diameter sphere with an attached telemetry whip antenna and a yellow light FL (5) Y 20s. The buoy is painted yellow and marked "Wave Buoy" with the phone number 858-534-3032. Mariners are requested to transit the area with caution. For more details or comments contact James Behrens at 858-534-3032.

Charts: 18740 18765 LNM: 50/19

SOUTHERN CALIFORNIA-ENCINITAS-DREDGE OPERATIONS

Marathon Construction Corp. is conducting dredging and excavating channels within San Elijo Lagoon in the vicinity of 33-00-36N 117-16-30W until 28 Feb 21. The dredging equipment for the main channels will be a 16" cutter-section with 8" and 10" cutter-section dredges being used in the smaller feeder channels. Dredges are anchored and marked with anchor buoys. Mariners are requested to transit the area with with caution at slow speeds to minimize wake. For more details or comments contact Project Manager Jon Ruth at 619-962-1480 or Dane Kost at 619-607-2682.

Chart 18774 LNM: 02/18

SOUTHERN CALIFORNIA-ESTERO BLUFFS STATE PARK-SUBMERGED ANCHOR CABLE

Mariners and surfers in the vicinity of North Cayucos are advised of an anchor cable extending from the surf zone to the grounded F/V POINT ESTERO in the vicinity of Estero Bluffs State Park 35-26-51N 120-55-09W. The anchor cable is marked with multiple orange fenders with the end of cable connected to the vessel. For more details or comments contact Coast Guard Sector LA/LB Command Center at 310-521-3815.

Chart 18703 LNM: 43/17

SOUTHERN CALIFORNIA-IMPERIAL BEACH-WAVERIDER BUOY

University of California, San Diego and the U.S. Army Corps of Engineers have deployed a waverider buoy in position 32-34-10N 117-10-08W, approximately 2 NM off Imperial Beach, CA. The buoy is a 3' diameter sphere with an attached telemetry whip antenna and Fl (5) Y 20s light characteristic, the buoy is painted yellow and is marked "Wave Buoy". For more details or comments contact James Behrens at 858-534-3032.

Chart 18765 LNM: 35/18

SOUTHERN CALIFORNIA-LONG BEACH-DREDGE OPERATIONS

Manson Construction Co. is conducting dredge operations in the Port of Long Beach, Berth F201 at 33-45-05N 118 -12-52W until 01 Feb 21. D/B VALHALLA and M/V JEFFREY M will be conducting operations and monitoring VHF-FM Chan. 12, 13 and 16. Mariners are requested to transit the area with caution. For more details or comments contact Michael Jokerst at 562-650-4525.

Charts: 18746 18751 LNM: 51/20

SOUTHERN CALIFORNIA-LOS ANGELES-SURVEY OPERATIONS

Vantuna Research Group is conducting sonar survey operations on the Palos Verdes Peninsula, Los Angeles, CA at 33-43-12N 118-20-42W until 28 Feb 21 during daylight hours. M/V NEOCLINUS will be conducting all operations and will monitor VHF-FM Chan. 16. Mariners are requested to transit the area with caution. For more details or comments contact Matt Robart at 541-231-9392.

Chart 18746 LNM: 38/20

SOUTHERN CALIFORNIA-MONTEREY BAY-WAVE GLIDER

The Jupiter Research Foundation (JRF) in collaboration with Monterey Bay Aquarium Research Institute (MBARI) will be conducting 24/7 autonomous, unmanned maritime vehicle operations of four Liquid Robotics, Wave Gliders (www.liquidr.com) until 30 Jan 21. We plan to deploy the vehicles in the vicinity of Moss Landing that will operate continuously between latitudes 35-07-14 N and 37-12-00 N and will extend shoreward from as far West as 124 W longitude. Operations consist of scientific ocean data collection. Wave Glider carries no fuel, lubricants, or hydrocarbons, is wave powered, remotely attended from JRF or Liquid Robotics Wave Glider Operations Center (WGOC), moving at speeds of approximately 1.5kt, and designed to give way or part if encountered by a vessel transmitting AIS. It is approximately 10' x 2' (surfboard size), green/copper in color, with a contact plaque and mast extending 1 meter above the water surface supporting a flag. Mariners are advised to use caution when transiting the area. For further information, authorities and mariners can contact JRF operations at 650-947-9920, or Liquid Robotics 24/7 WGOC Operations at 888-574-4574, 408-636-4205.

Chart 18700 LNM: 29/20

SOUTHERN CALIFORNIA-OCEANSIDE-MILITARY OPERATIONS

The U.S. Navy will be conducting military operations in the vicinity of offshore Oceanside, CA from 1600-0200 nightly, until 15 Feb 21 at 33-15-29N

SOUTHERN CALIFORNIA-OCEANSIDE-MILITARY OPERATIONS

117-31-31W. Mariners are requested to transit the area with caution. For more details or comments contact Kyle Harris at 707-474-7338.

Chart 18774 LNM: 02/21

SOUTHERN CALIFORNIA-OFFSHORE MONTEREY BAY-BUOY DEPLOYMENT

Scripps Institution of Oceanography have deployed a buoy offshore Monterey Bay, CA at 36-42-00N 122-20-33W. Station 185-Monterey Bay West-NDBC 46114 is a 3' diameter sphere with an attached telemetry whip antenna and a yellow light Fl Y 5(20)s. The buoy is painted yellow and marked "Wave Buoy" with the phone number 858-534-3032. Mariners are requested to transit the area with caution. For more details or comments contact James Behrens at 858-534-3032.

Chart 18680 LNM: 41/20

SOUTHERN CALIFORNIA-OFFSHORE OCEANSIDE-HELICOPTER OPERATIONS

RSG Rotorcraft Services Group will be conducting helicopter operations offshore Oceanside, CA at 33-10-00N 117-35-00W and 33-09-00N 117-28-00W. Helicopter N549QC will be lowering a submersible sonar to the depths of 1640 ft. There will be a rescue boat on scene to provide a barrier to the cable. Mariners are requested to transit the area with caution. For more details or comments contact Craig Werley at 607-821-9542.

Chart 18746 LNM: 51/20

SOUTHERN CALIFORNIA-OFFSHORE POINT CONCEPTION-BUOY DEPLOYMENT

NOAA Pacific marine Environmental Lab have deployed a NOAA GPS buoy offshore Point Conception, CA at 34-27-24 N 120-40-49W. The buoy is a 3' yellow conical buoy with a Fl (4) Y 20s light characteristic. For more details or comments contact Chris Meinig at 206-526-6177.

Charts: 18700 18720 18721 LNM: 42/20

SOUTHERN CALIFORNIA-OFFSHORE SANTA MONICA BAY-BUOY DEPLOYMENT

Scripps Institution of Oceanography have deployed a buoy off Santa Monica Bay at 33-51-35N 118-38-27W. Station 028-Santa Monica Bay-NDBC 46221 is a 3' diameter sphere with an attached telemetry whip antenna and a yellow light Fl Y 5(20)s. The buoy is painted yellow and marked "Wave Buoy" with the phone number 858-534-3032. Mariners are requested to transit the area with caution. For more details or comments contact James Behrens at 858-534-3032.

Chart 18774 LNM: 48/20

SOUTHERN CALIFORNIA-POINT CONCEPTION-WAVERIDER BUOY

University of California, San Diego and the U.S. Army Corps of Engineers have deployed a waverider buoy (Station 071-Harvest Buoy) in position 34-27-06N 120-46-48W, approximately 16 nm west of Point Conception, CA. The buoy is a 3' diameter sphere with an attached telemetry whip antenna and Fl (5) Y 20s light characteristic, the buoy is painted yellow and is marked "Wave Buoy". For more details or comments contact James Behrens at 858-534-3032.

Charts: 18700 18720 18721 LNM: 41/18

SOUTHERN CALIFORNIA-POINT CONCEPTION-WAVERIDER BUOY

University of California, San Diego and the U.S. Army Corps of Engineers have deployed a waverider buoy (Station 222-Santa Lucia Escarpment) in position 34-46-00N 121-29-48W, approximately 54 nm northwest of Point Conception, CA. The buoy is a 3' diameter sphere with an attached telemetry whip antenna and Fl (5) Y 20s light characteristic, the buoy is painted yellow and is marked "Wave Buoy". For more details or comments contact James Behrens at 858-534-3032.

Chart 18700 LNM: 41/18

SOUTHERN CALIFORNIA-POINT MUGU-BUOY DEPLOYMENT

Scripps Institution of Oceanography has deployed an atmospheric sampling buoy south of Point Mugu, CA in position 34-03-12N 119-09-47W. The yellow buoy will be exposed 12' above the waterline and will be flashing FL 1 Y 4s. For more details or comments contact Lisa Hazard at 858-822-2873.

Charts: 18720 18725 LNM: 26/18

SOUTHERN CALIFORNIA-PORT OF HUENEME-DREDGE OPERATIONS

Curtin Maritime will conduct maintenance dredge operations in Port of Hueneme 24 hrs per day 7 days a week until 30 Apr 21. Material will be removed from within the Entrance Channel along with the Turning Basin and placed at nearshore placement site or Hueneme Beach. DB IRONBOUND, DB SALTA VERDE along with tugs BERNADINE C, SEANA C, SARAH C, and two Split hull scows will be conducting operations. All vessels will be monitoring VHF-FM Chan. 01A, 13, and 14. Mariners are requested to transit the area with caution. For more details or comments contact Project Manager Chris Latino at 270-493-0354.

Charts: 18724 18725 LNM: 49/20

SOUTHERN CALIFORNIA-PORTS OF LOS ANGELES/LONG BEACH-CERRITOS CHANNEL-BRIDGE

REPLACEMENT SCHUYLER HEIM BRIDGE CONSTRUCTION-Two temporary trestles are in place between the Henry Ford Railroad Bridge and the replacement bridge. The replacement bridge provides 75' of horizontal clearance and 45' of vertical clearance from mean high water to low steel. Work is taking place from 0600 to 1600, Mon-Fri. For conditions at the bridge, mariners can contact Caltrans at 562-572-5852, 310-882-3160, 949-394-9168, 310-715-9500; or the contractor at 818-489-5772, 909-322-4424. Mariners are requested to transit the area with caution. For more details or comments contact the Coast Guard Bridge Office at 510-437-3516.

Chart 18749 LNM: 38/20

SOUTHERN CALIFORNIA-PORTS OF LOS ANGELES/LONG BEACH-LA/LB HARBOR-BRIDGE

VINCENT THOMAS BRIDGE-Painting of the underdeck of the bridge continues. The 180' long platform has entered the main navigation span west of centerline and the vertical clearance of the bridge has been reduced by 4 feet. Once work is completed in a section the temporary platform move east until it reaches just west of centerline in Nov 21. The upstream and downstream corners and every 50' along the upstream and downstream side of the platform will be lighted at night with steady burning red lights (see V_Thomas_Platform_Lighting1.pdf at the end of this notice). Work will take place during daylight hours, Monday through Friday. For conditions at the bridge mariners can contact 213-479-4138, 213-479-1144 or 310-261-9552. For more details or comments contact the Coast Guard Bridge Office at 510-437-3516.

SOUTHERN CALIFORNIA-PORTS OF LOS ANGELES/LONG BEACH-LA/LB HARBOR-BRIDGE

GERALD DESMOND BRIDGE REPLACEMENT PROJECT-Underdeck platforms have been installed to conduct finishing work on the replacement bridge. The platforms are above low steel of the existing being replaced bridge. There is no reduction in vertical clearance in the navigation channel. For conditions at the work site, mariners can contact the contractor via marine radio on VHF-FM CH 13 and 79 or by cell at 424-230-9925. For more details view the website, www.NewGDBridge.com/Waterway, or contact the Coast Guard Bridge Office at 510-437-3516.

Chart 18749 LNM: 51/20

SOUTHERN CALIFORNIA-SAN CLEMENTE ISLAND-SAFETY ZONES

Mariners operating in the vicinity of San Clemente Island are reminded of the restricted waterway access surrounding San Clemente Island (33 CFR 165.1131; 33CFR 165.1141). Since the inception of the regulations, numerous safety zone violations have been processed by Coast Guard Sector San Diego. Safety Zone Incursions put the public at risk and cause costly and unnecessary training delays, as well as range cancellations. Violators of the San Clemente Island Safety and Security Zones are subject to monetary penalties. Criminal penalties may also be issued for repeated Safety and/or Security Zone violations. Failure to comply with the federal regulations could result in civil penalties of up to $90,901.00.
Furthermore, if a mariner holds a Merchant Mariner Credential, suspension or revocation action may be pursued against the mariner's credential. For more details see MSSB 02-16 SCI Safety Zone.pdf in the enclosure section.

Chart 18762 LNM: 41/16

SOUTHERN CALIFORNIA-SAN DIEGO BAY-BRIDGE

CORONADO BAY BRIDGE MAINTENANCE-Scaffolding installed between piers 11-12, 12-13, and 13-14, reduces vertical clearance by more than 8'. The upstream and downstream lower edges of the scaffolding are lighted at night with red lights. For more details or comments contact the Coast Guard Bridge Office at 510-437-3461.

Charts: 18772 18773 LNM: 13/20

SOUTHERN CALIFORNIA-SAN DIEGO BAY-MARINE CONSTRUCTION

R.E. Staite Engineering Inc. will conduct marine construction at NASSCO Graving Dock Cofferdam berth at position 32-41-16N 117-08-16W until 31 Jan 21. CB AMERICAN 11320 along with push boat JEANIE R will conduct operations. All vessels will monitor VHF-FM Chan. 16. Mariners are requested to transit at lowest safe speed to minimize wake and proceed with caution after passing arrangements have been made. For more details or comments contact project manager Erick Myers at 619-233-0178.

Charts: 18772 18773 LNM: 15/20

SOUTHERN CALIFORNIA-SAN DIEGO BAY-MARINE CONSTRUCTION

R.E. Staite Engineering Inc. will conduct marine construction at NASSCO Berth 07 and Berth 08 at position 32-41-35N 117-09-03W until 26 Feb 21. Vessel DB PALOMAR, RES 180, along with push boat JEANIE R in conjunction with tug CUYAMACA will conduct operations. All vessels will monitor VHF-FM Chan 16. Mariners are requested to transit at lowest safe speed to minimize wake and proceed with caution after passing arrangements have been made. For concerns or comments contact project manager Erick Myers at 619-233-0178.

Charts: 18772 18773 LNM: 52/20

SOUTHERN CALIFORNIA-SAN DIEGO BAY-MARINE CONSTRUCTION

R.E. Staite Engineering Inc. will be conducting marine construction until 05 Feb 21 at the waterfront portion of San Diego Bay at 32-43-28N 117-12-27W. Vessel RES 150, tug CUYAMACA along with push boat JENNIE R will be in the area and monitoring VHF-FM Chan. 16. Mariners are requested to transit the area with caution. For more details or comments contract John Luetzow at 727-580-7570 or Erick Myers at 619-233-0178.

Chart 18773 LNM: 51/20

SOUTHERN CALIFORNIA-SAN DIEGO BAY-MARINE CONSTRUCTION

R.E. Staite Engineering Inc. is conducting marine construction at Huntington Ingalls Industries-Pier 7 Marginal Wharf at 32-41-36N 117-09-04W until 26 Feb 21. Vessels DB PALOMAR, RES 180, JOHN DRAKE, JEANIE R, and tug CUYAMACA will conduct operations. All vessels will monitor VHF-FM Chan. 16. Mariners are requested to transit at lowest safe speed to minimize wake and proceed with caution after passing arrangements have been made. For more details or comments contact project manager Erick Myers at 619-233-0178.

Charts: 18772 18773 LNM: 52/20

SOUTHERN CALIFORNIA-SAN DIEGO BAY-MARINE CONSTRUCTION

R.E. Staite Engineering Inc. will conduct marine construction at the San Diego Bay Waterfront at 32-41-24N 117-08-33W until 26 Feb 21. Vessels CB RES 180, DB RES 80, TB KILLEEN will work in conjunction with push boat JENNIE R during operations and monitor VHF-FM Chan. 16. Mariners are requested to transit at lowest safe speed to minimize wake and proceed with caution after passing arrangements have been made. For more details or comments contact project manager Joan Rose at 619-233-0178.

Chart 18773 LNM: 50/20

SOUTHERN CALIFORNIA-SAN DIEGO BAY-MARINE EVENT

The Cortez Racing Association (CRA) will sponsor the CRA Winter Regatta on 23 Jan 21 from 1000 to 1700. The regatta will consist of 40 sailboats starting near Harbor Island, proceed to and round San Diego Bay Channel Lighted Buoy 16 (LLNR 1620), continue to San Diego Bay Channel Lighted Buoy 28 (LLNR 1980), and end back at Harbor Island. Mariners are requested to transit the area with caution. For more details or comments contact Richard Chambers at 858-395-1907.

Chart 18773 LNM: 02/21

SOUTHERN CALIFORNIA-SAN DIEGO BAY-NAVY ESTUARY-BRIDGE

NIMITZ PEDESTRIAN BRIDGE- The City of San Diego is conducting over-water construction work on the bridge deck. There is no change to the bridge clearances, but mariners are urged to exercise caution when transiting through the bridge. For more info or comments, you can contact the Coast Guard Bridge office at 510-437-3461.

Chart 18773 LNM: 02/21

SOUTHERN CALIFORNIA-SAN DIEGO RIVER-BRIDGE

WEST MISSION BAY DRIVE BRIDGE-The City of San Diego is replacing the existing bridge. A temporary work trestle, providing a vertical clearance of 8' over Mean Sea Level and open channels between silt curtains, is in place. Scheduled completion date of the bridge replacement project is

SOUTHERN CALIFORNIA-SAN DIEGO RIVER-BRIDGE

November 2022. Mariners are urged to use caution while navigating the replacement bridge work site. For more details or comments contact the Coast Guard Bridge Office at 510-437-3461.

Chart 18765 LNM: 34/19

SOUTHERN CALIFORNIA-SAN DIEGO-MARINE CONSTRUCTION

The Army Corps of Engineers will conduct marine construction on Naval Base Coronado at 32-41-07N 117-13-11W until 15 Mar 21. The operation will on the beach and extend into the surf zone during high tide near runway 36 adjacent to the Pacific Ocean. Construction will consist of the replacement of existing lights and rip rap. Mariners are urged to transit at their slowest safe speed to minimize wake, and proceed with caution after passing arrangements have been made. For more details or comments contact LCDR Cody Keesee at 619-545-2144.

Chart 18773 LNM: 44/20

SOUTHERN CALIFORNIA-SAN NICHOLAS ISLAND-ATMOSPHERIC BUOY

Naval Air Systems Command has deployed an atmospheric sampling buoy in position 33-15-30N 119-35-58W. The yellow buoy extends 10 ft above the waterline and is 4 ft in diameter, it is flashing F1 Y 4s. For further details or comments contact Kyle Edwards at 805-989-0672 or Robi Garcia at 805-989-5040.

Chart 18740 LNM: 18/20

SOUTHERN CALIFORNIA-SAN NICOLAS ISLAND-SANTA ROSA ISLAND-FISHING OPERATIONS

Ventura County Commercial Fisherman's Association member fishing vessels are conducting fishing operations in the vicinity of 33-35-13N 120-16-04W and 33-08-30N 119-52-03W. Fishing gear will be marked by colored floats up to 30 inches in diameter and high flyer pole with radar reflector and light. Mariners are requested to use caution when transiting the area. Vessels may be contacted on VHF-FM Chan. 11 or 16. For more details or comments contact Tim Athens at 805-448-4455.

Chart 18720 LNM: 42/19

SOUTHERN CALIFORNIA-SAN PEDRO-MARINE CONSTRUCTION

Jilk Heavy Construction Co. will conduct marine construction at the Port of San Pedro Waterfront Berths 74-84 at 33-44-13N 118-16-40W during daylight hours until 31 Jan 21. A crane barge along with several work skiffs will be in the area and monitoring VHF-FM Chan. 16. Mariners are requested to transit the area with caution. For more details or comments contact Joe Salgado at 310-505-0142.

Chart 18751 LNM: 46/20

SOUTHERN CALIFORNIA-SANTA MONICA-BUOY DEPLOYMENT

A Waverider buoy has been deployed 1 NM South of Topanga Beach in position 34-01-19N 118-34-42W in 65 ft of water. The buoy will be deployed indefinitely. The buoy is operated by Scripps Institute of Oceanography. The buoy is a 3 ft diameter sphere with an attached telemetry whip antenna and a light characteristic of Fl Y (5+1)20s. The buoy is painted yellow and marked "Wave Buoy" with the phone number 858-534-3032. For further comments or details contact James Behrens at 858-534-3032.

Chart 18744 LNM: 34/20

SOUTHERN CALIFORNIA-VENTURA HARBOR-DREDGE OPERATIONS

Manson Construction Co. is conducting hydraulic maintenance dredging of the Ventura Harbor Main Channel and sand trap at 34-14-51N 119-16-07W 24 hours a day from 01 Feb 21 to 15 Mar 21. Dredge HR MORRIS, DB FREYA, dredge tender PUP, dredge tender CUB, and survey boat RUSTLER will monitor VHF-FM Chan. 16 and 67. Material will be transported through floating pipeline, submerged pipeline, and shore pipeline to the disposal area south of surfer's knoll. Mariners are requested to transit the area with caution. For more details or comments contact Project Manager Max Oviedo at 206-619-7729.

Chart 18725 LNM: 03/21

SECTION VIII - LIGHT LIST CORRECTIONS

An Asterisk *, indicates the column in which a correction has been made to new information

(1) No.	(2) Name and Location	(3) Position	(4) Characteristic	(5) Height	(6) Range	(7) Structure	(8) Remarks	
3640	CHANNEL ISLANDS HARBOR SOUTH JETTY LIGHT 2	34-09-21.726N 119-13-38.667W	Fl R 2.5s	35	5	TR on post.	HORN: 1 blast ev 30s (1s bl). The sound signal can be activated by keying VHF-FM Ch. 83A 5 times within 10 seconds. *	03/21

PUBLICATION CORRECTIONS

ANNOUNCEMENT – U.S. Coast Pilot® 7 and U.S. Coast Pilot® 10 - NEW EDITIONS – Spring 2020

U.S Coast Pilot 7 will be divided into two editions in the spring 2020 due to its large size. The following are the projected new editions that will be issued on the same date and ready for free download and weekly updates on June 9, 2020, at nauticalcharts.noaa.gov/publications/coast-pilot/index.html.

PUBLICATION–National Oceanic Atmospheric Administration (NOAA) – U.S. Coast Pilot 7, Pacific Coast: California 52nd Edition, 2020

PUBLICATION–National Oceanic Atmospheric Administration (NOAA) – U.S. Coast Pilot 10, Pacific Coast:

Oregon, Washington, Hawaii and Pacific Islands 1st Edition, 2020

Only Print-on-Demand bound copies are available for purchase; visit
nauticalcharts.noaa.gov/publications/print-agents.html#coast-pilot

For any questions or comments; visit
nauticalcharts.noaa.gov/customer-service/assist/

NOAA Office of Coast Survey's Nautical Publications Branch
April 2020

LNM: 18/20

ENCLOSURES

REPORT OF DELAY AT DRAWBRIDGE

Delay_Report_11-2017.pdf
Use link above to Report a Delay at a Drawbridge.

LNM: 06/07

SOUTHERN CALIFORNIA-PORTS OF LOS ANGELES/LONG BEACH-LA/LB HARBOR-BRIDGE

V_Thomas_Platform_Lighting1.pdf
See link above for platform lighting for Vincent Thomas Bridge.

LNM: 28/19

NORTHERN CALIFORNIA-CORTE MADERA CREEK-BRIDGE

BonAirRd_Trestle.pdf
See link above for Bon Air Rd Temporary Trestle Navigation Channel.

LNM: 29/18

NORTHERN CALIFORNIA-DELTA & RIVERS-SACRAMENTO RIVER-BRIDGE

RVBridge_PlatformCable_Lighting.pdf
RIO VISTA DRAWBRIDGE-See enclosure above for temporary platform location and lighting.

LNM: 22/20

SAN CLEMENTE ISLAND-SAFETY ZONES

San Clemente Safety Zone.pdf
See link above for Maritime Safety and Security Bulletin 001-19.

LNM: 49/19

NORTHERN CALIFORNIA-SAN FRANCISCO-HAZARD TO NAVIGATION

Commercial FIshing Vessel Hazard.pdf
see link above.

LNM: 51/20

NORTHERN CALIFORNIA-DELTA & RIVERS-AMERICAN RIVER-BRIDGE

CA_RT_160_PierScourProtection.pdf
DOWNSTREAM CA ROUTE 160 BRIDGE-See link above for pier rock slope scour protection details.

LNM: 42/20

NOAA DISCONTINUE NOTICE FOR TIDE TABLE AND CURRENT TABLE

NOAA Discontinue Notice.pdf
See enclosure above.

LNM: 45/20

NORTHERN CALIFORNIA-DELTA & RIVERS-SACRAMENTO RIVER-BRIDGE

Temp_Lighting_Paintersville.pdf
PAINTERSVILLE BRIDGE-See enclosure above for temporary pier lighting.

LNM: 50/20

ARIZONA-COLORADO RIVER-BRIDGE

Cibola_Alternate_Channel.pdf
CIBOLA FARMERS BRIDGE- See link above for temporary underdeck platform lighting and alternate navigation channel lighting.

LNM: 37/20

NORTHERN CALIFORNIA-SAN FRANCISCO BAY-BRIDGE

PlatformLighting_GG_Bridge_09Nov20.pdf
GOLDEN GATE BRIDGE-Temporary Platform Location and Lighting revised 09 Nov 20.

LNM: 45/20

THE LOCAL NOTICE TO MARINERS IS AVAILABLE ON THE WORLD WIDE WEB AT HTTPS://WWW.NAVCEN.USCG.GOV

CONNER.TYRONE.L.1163641140 Digitally signed by CONNER.TYRONE.L.1163641140 Date: 2021.01.20 09:52:03 -08'00'

T. L. Conner
U.S. Coast Guard
Acting Chief Waterways Management Branch

U.S. COAST GUARD
REPORT OF DELAY AT DRAWBRIDGE
PER 33 CFR 117.5

BRIDGE NAME: _____ DATE: _____

MILE :_____WATERWAY: _____

1. Name/ Type of Vessel: _____Direction of Travel : _____
2. Vessel Owner (Name): _____
   (Address): _____
3. Name of Pilot (if applicable): _____
   (Address): _____
4. Time vessel signaled for bridge opening: _____
5. Location of vessel when signal was given: _____
6. Time and location of vessel when delay began: _____
7. Method of signal for bridge opening: ( ) Radio ( ) Sound ( ) Visual.
   (If sound or visual signal was used, specify:_____)
8. Time bridge operator acknowledged signal: _____
9. Method of bridge operator acknowledgement: ( ) Radio ( ) Sound ( ) Visual
   (If sound or visual signal was used, specify: _____)
10. Did bridge operator acknowledgement indicate the bridge,
    ( ) Could be opened immediately?
    ( ) Could not be opened immediately?
11. If land traffic crossed the bridge:
    Time land traffic started across the bridge _____
    Time land traffic stopped crossing the bridge _____
    Did land traffic stop on the bridge? _____
    Duration land traffic stopped on the bridge _____
12. Time drawbridge opened for navigation _____
13. Additional comments:
    _____
    _____
    _____

I certify the above information is true to the best of my knowledge and understand this statement may be used by the U.S. Coast Guard in levying fines against the bridge owner.

Signature _____

Telephone _____

Mariners may complete and return to:

Commander (dpw)
Eleventh Coast Guard District
Coast Guard Island, Building 50-2
Alameda, CA 94501-5100
Attn: Bridge Office

Fax: (510) 437-5836

Email: Carl.T.Hausner@uscg.mil

Questions? Please contact: Carl Hausner, Bridge Administrator, Eleventh Coast Guard District
Office: (510) 437-3516
Cell: (510) 219-4366

Mariners are reminded not to require bridge openings for appurtenances nonessential to navigation, per 33 CFR 117.11

Vincent Thomas Highway Bridge
Mile 3.0
Los Angeles/Long Beach Harbor
Painting Project

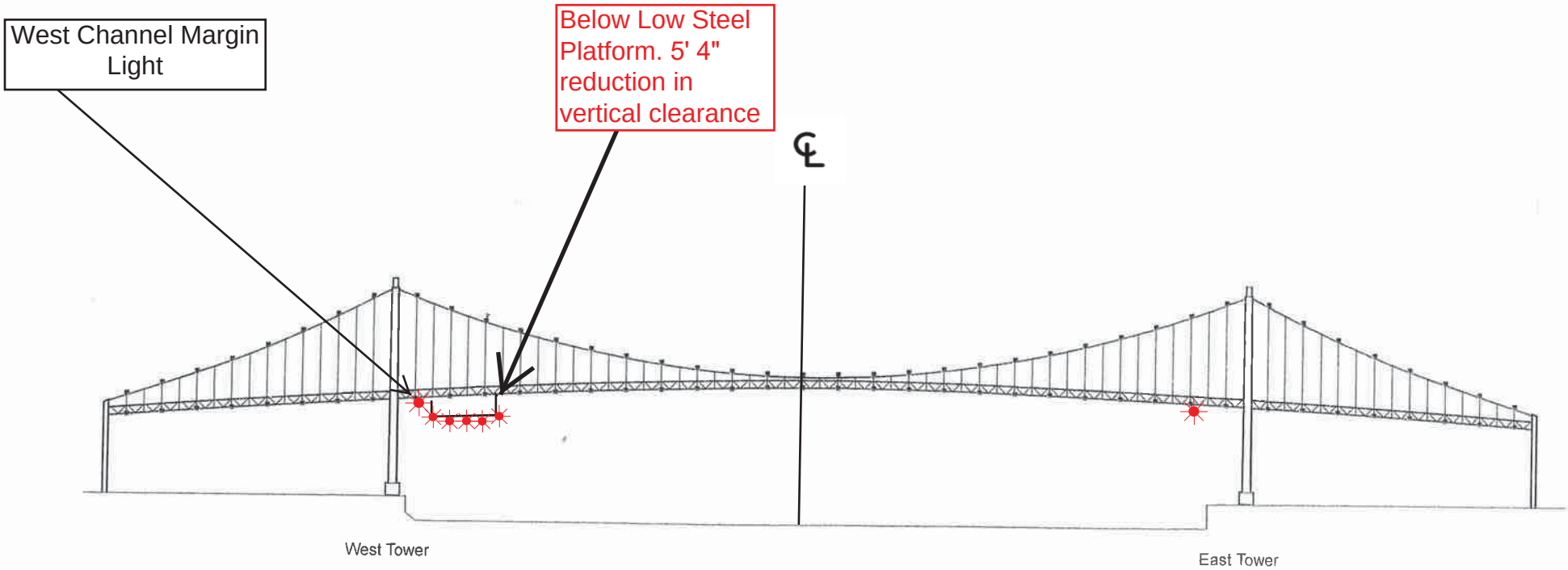

A 180 foot long under deck temporary platform will reduce vertical clearance by 5' 4". Each corner and every 50 feet along the the upstream and downstream side of the platform will lighted at night with steady burning red lights visible at 2000 yards by approaching vessels. In a duration of 1-year the platform will progress from the western channel margin light to 250' west of the centerline of the bridge.

Bon Air Rd Bridge Replacement Project
Mile 2.2, Corte Madera Creek

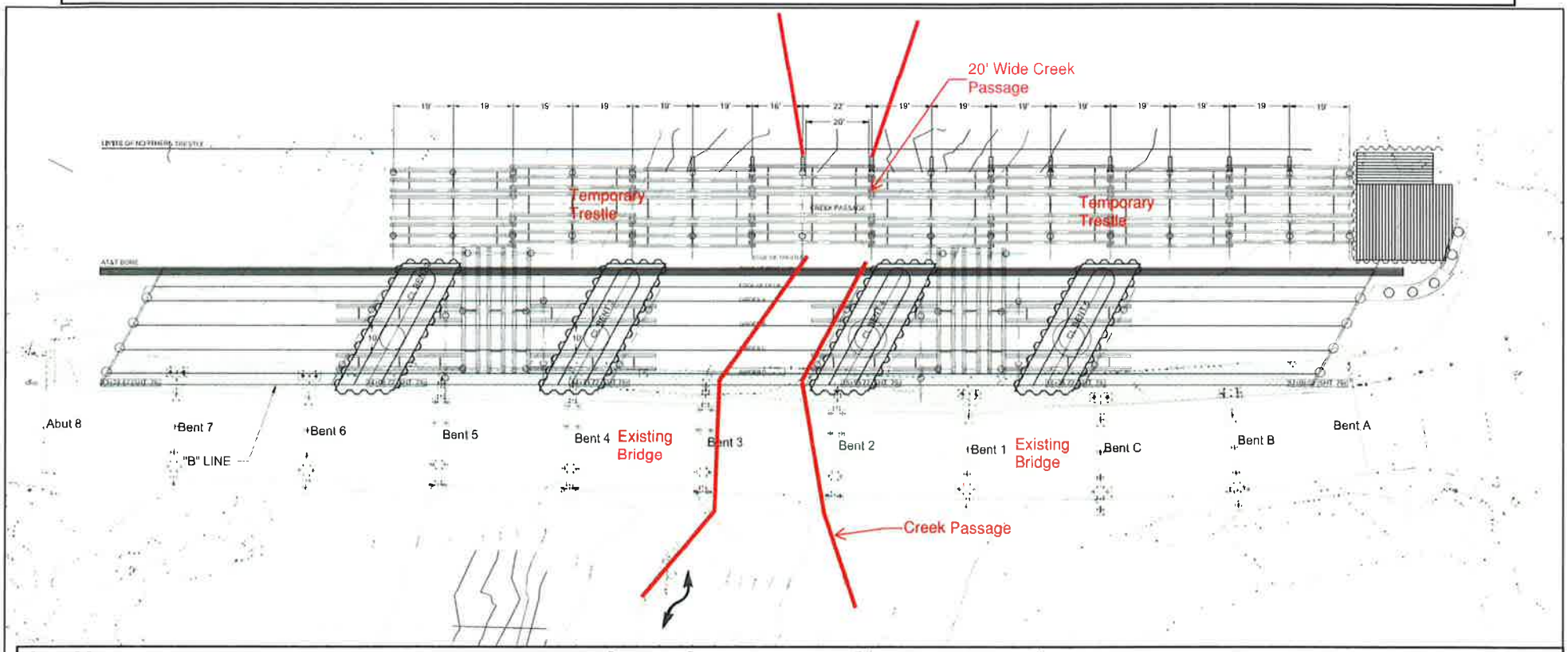

Cofferdams and a temporary trestle will be installed to facilitate construction of the replacement bridge. The temporary trestle will provide a center creek navigation channel with at least 20 feet of horizontal clearance and 3 feet of vertical clearance, from mean high water to the lowest hittable portion of the trestle, for waterway users. Mariners are urged to use extreme caution when transiting the construction site.

Temporary Underdeck Platform Lighting

Rio Vista Bridge

Mile 12.8, Sacramento River

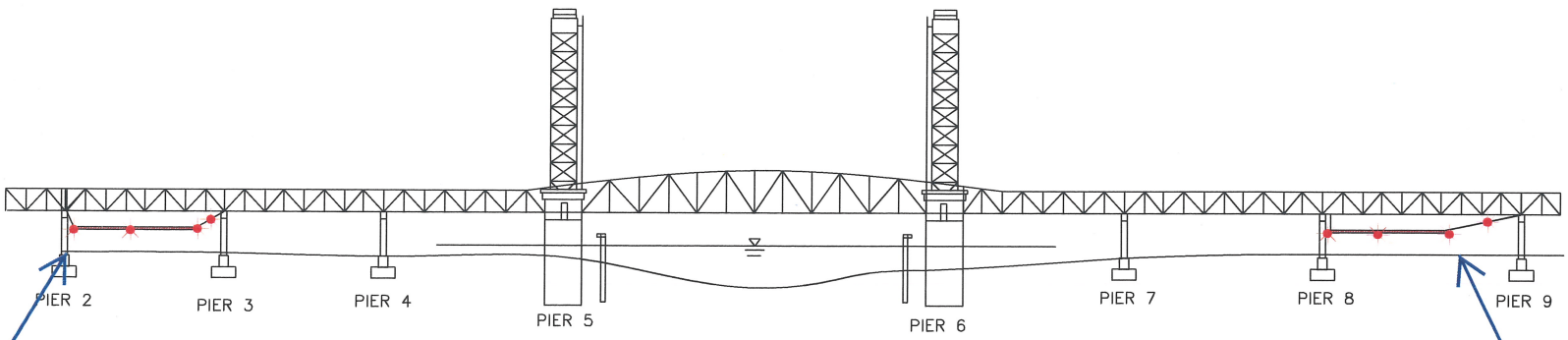

Two temporary platforms, and associated support cables, are installed beneath low steel of the bridge in span 2 and 8 and reduces vertical clearance in those spans by no more than 4 feet. The lower 4 corners and midpoint of each platform will be lighted at night with steady burning red lights, visible at 2,000 yards from approaching vessels. The support cable will be lighted with red lights every 50 feet. Mariners are requested to use alternate or main span of the bridge while these temporary platforms are in place.

STATE OF CALIFORNIA – DEPARTMENT OF TRANSPORTATION
Caltrans
FUNCTIONAL SUPERVISOR
CALCULATED – DESIGNED BY
CHECKED BY
REVISED BY
DATE REVISED
BORDER LAST REVISED 7/27/2010
USERNAME => $USER
DGN FILE => $REQUEST
RELATIVE BORDER SCALE IS IN INCHES
UNIT
PROJECT NUMBER & PHASE
LAST REVISED
DATE PLOTTED => $DATE
TIME PLOTTED => $TIME

Maritime Safety and Security Bulletin: 001-19

Effective Date: November 1, 2019

U.S. Coast Guard Sector San Diego
2710 North Harbor Drive
San Diego, CA 92101
Phone: (619) 278-7656
Fax: (619) 278-7235

SAN CLEMENTE ISLAND LIMITED ACCESS ADVISORY

Mariners operating in the vicinity of San Clemente Island are reminded of the **restricted** waterway access surrounding San Clemente Island according to Title 33, Code of Federal Regulations (CFR) Part 165.1131 and 33 CFR 165.1141).

Since the inception of the regulations, Coast Guard Sector San Diego has processed numerous safety zone violations. Safety Zone incursions put the public at risk and cause costly and unnecessary training delays, as well as range cancellations. Violators of the San Clemente Island Safety and Security Zones are subject to monetary penalties. Criminal penalties may also be issued for repeated Safety and/or Security Zone violations. Failure to comply with the federal regulations could result in civil penalties of up to $94,219 under 46 USC 70036(a). Furthermore, if a mariner holds a Merchant Mariner Credential, suspension or revocation action may be pursued against the mariner's credential.

San Clemente Island is a top strategic Department of Defense military training facility. Dangerous naval activities occur weekly to ensure deployable military forces are trained for worldwide missions (e.g. small arms training, ground and air explosive ordinance training). Mariners conducting operations around San Clemente Island must abide by Federal regulations that apply to the three NM radius around the island. Eight zones comprise the Safety and Security Zones. Restriction times are based on U.S. Navy live fire exercises. Wilson Cove Security Zone and Zone G of the Safety Zones are permanently closed. Mariners wishing to transit through Zone G must have preapproval from San Clemente Island. The U.S. Navy makes every effort to maintain a schedule in advance and minimize the restrictions to the public for water access around the island. Periods of enforcement can be found at https://www.scisland.org. Restricted access areas and times are highlighted in red and listed in the associated website chart. If a Safety Zone section is green, mariners may access the waters. Mariners are advised to contact San Clemente Island via call sign "KRAKEN" on VHF CH 82A, or call Coast Guard Sector San Diego Joint Harbor Operations Center on VHF CH16, or at (619) 278-7033 or 7656, to verify real time status of the restricted waters.

If you would like more information about the Security and Safety zones surrounding San Clemente Island, please contact the Coast Guard Sector San Diego Waterways Management Division at 619-278-7656 or by email at D11MarineEventsSD@uscg.mil

Sincerely,

T.J. BARELLI
Captain, U. S. Coast Guard
Captain of the Port San Diego

MARINE SAFETY/SECURITY INFORMATION BULLETIN (MSIB) 20-02

U.S. Department of Homeland Security
Coast Guard Sector San Francisco

Safety Alert: Commercial Fishing Vessel "Work Lights" Create Potential Night-Time Navigation Hazard

Large merchant ships in or near the offshore approaches to San Francisco Bay have indicated to the Coast Guard that high-intensity "work lights" used by commercial fishing vessels obscure commercial fishing vessels' navigation lights at night and in low visibility conditions.

A clear and present threat to navigation safety exists when one vessel cannot see the navigation lights of another vessel. Navigation light arrangements are required by international and inland navigational rules and regulations. Rule 20 of the Convention on the International Regulations for Preventing Collisions at Sea, 1972 (COLREGS) and Rule 20 of the Inland Navigational Rules Act of 1980 (33 Code of Federal Regulations (C.F.R.) § 83.20) state, in relevant part:

"The Rules concerning lights shall be complied with from sunset to sunrise, and during such times no other lights shall be exhibited, except such lights as cannot be mistaken for the lights specified in these Rules or do not impair their visibility or distinctive character, or interfere with the keeping of a proper look-out.

The lights prescribed by these Rules shall, if carried, also be exhibited from sunrise to sunset in restricted visibility and may be exhibited in all other circumstances when it is deemed necessary."

All vessels operating near the San Francisco Bay offshore traffic lanes are required to comply with applicable navigational rules and regulations. Vessels are encouraged to maintain an active listening watch on VHF/FM Channels 13 and 16 and, when the intentions of another vessel are unclear, communicate to make arrangements to reduce the risk of collision.

Timely reporting and enforcement of violations of navigational rules and regulations promotes safer navigation. Vessel masters, pilots, and operators are encouraged to report incidents which merit investigation. Reports will be fully investigated and may result in license suspension and revocation proceedings or the assessment of civil penalties. Violations of Rule 20 are subject to a maximum penalty amount of $15,173 per violation under 33 U.S. Code (U.S.C.) § 1608 (for COLREGS violations) and 33 U.S.C. § 2072 (for inland rule violations), as adjusted by 33 C.F.R. § 27.3.

Sincerely,

M. B. Byrd

M. B. BYRD
Captain, U.S. Coast Guard
Captain of the Port

Pier Scour Replacement
Downstream CA Route 160 Bridge, mile 2.0, American River

POST MILES TOTAL PROJECT	SHEET NO.	TOTAL SHEETS
4.5/5.7, R44.5	174	175

REGISTERED CIVIL ENGINEER 6-15-19 DATE

6-17-19
PLANS APPROVAL DATE

REGISTERED PROFESSIONAL ENGINEER DAVID A. ROMERO No. 61240 Exp. 06-30-19 CIVIL STATE OF CALIFORNIA

THE STATE OF CALIFORNIA OR ITS OFFICERS OR AGENTS SHALL NOT BE RESPONSIBLE FOR THE ACCURACY OR COMPLETENESS OF SCANNED COPIES OF THIS PLAN SHEET.

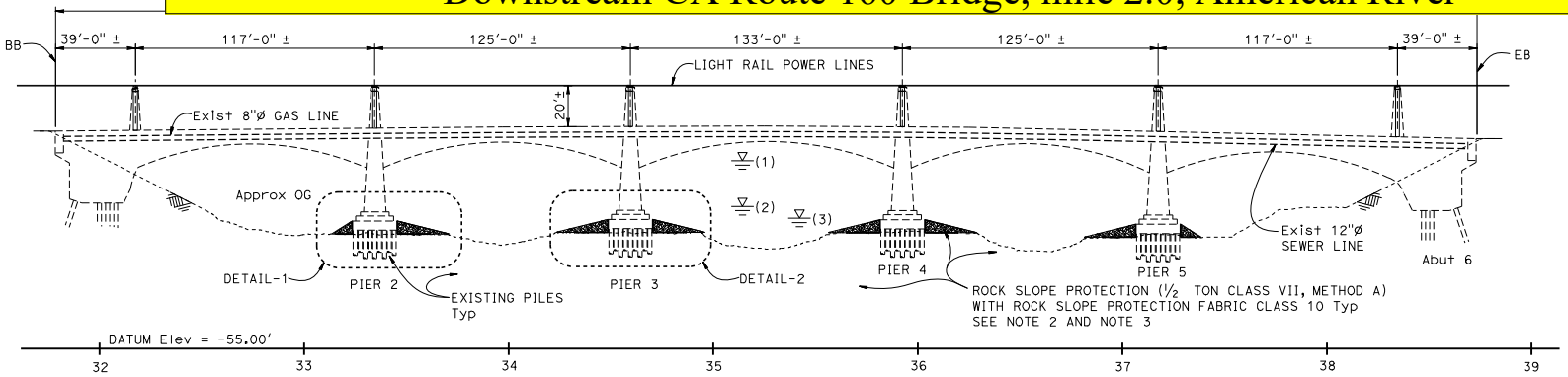

ELEVATION
1" = 30'

LEGEND:

(1) High water mark during A 100 year Storm 37.0' ±

(2) High water mark during Construction window July 15th through October 15th = 14.66' ±

(3) Low water mark during Construction window July 15th through October 15th = 8.86' ±

----- Existing Structure

Half Ton Rock Slope Protection (½ Ton Class VII, Method A)

QUANTITIES

REMOVE ROCK SLOPE PROTECTION	LUMP	SUM
ROCK SLOPE PROTECTION (½ TON, CLASS VII, METHOD A) (CY)	4,000	CY
ROCK SLOPE PROTECTION FABRIC (CLASS 10)	2,468	SQYD

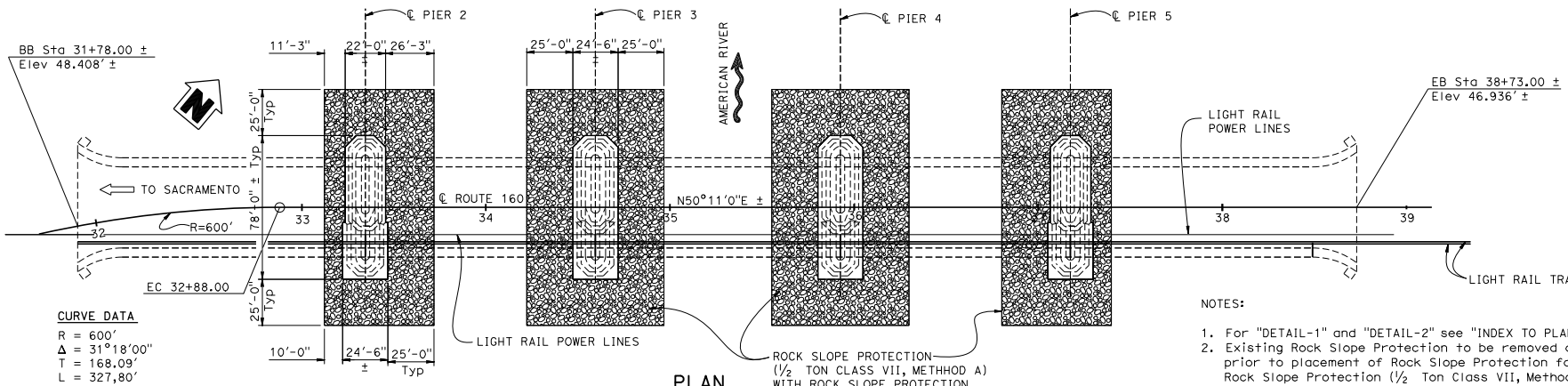

CURVE DATA

R = 600'
Δ = 31°18'00"
T = 168.09'
L = 327,80'

PLAN
1" = 30'

NOTES:

1. For "DETAIL-1" and "DETAIL-2" see "INDEX TO PLANS " sheet
2. Existing Rock Slope Protection to be removed at all existing Piers prior to placement of Rock Slope Protection fabric Class 10 with, Rock Slope Protection (½ Ton Class VII, Method A)
3. For Existing Rock Slope Protecting removal, see "EXISTING ROCK SLOPE PROTECTION REMOVAL" detail on "INDEX TO PLANS" sheet

NOTE:
THE CONTRACTOR SHALL VERIFY ALL CONTROLLING FIELD

Mariners should use the center of each navigation channel of the bridge to avoid the rock slope scour protection.

Dist	COUNTY	ROUTE	POST MILES TOTAL PROJECT	SHEET NO.	TOTAL SHEETS
03	Sac	99, 160	4.5/5.7, R44.5	175	175

REGISTERED CIVIL ENGINEER 6-15-19 DATE

6-17-19
PLANS APPROVAL DATE

REGISTERED PROFESSIONAL ENGINEER DAVID A. ROMERO No. 61240 Exp. 06-30-19 CIVIL STATE OF CALIFORNIA

THE STATE OF CALIFORNIA OR ITS OFFICERS OR AGENTS SHALL NOT BE RESPONSIBLE FOR THE ACCURACY OR COMPLETENESS OF SCANNED COPIES OF THIS PLAN SHEET.

INDEX TO PLANS

SHEET NO.	TITLES
1	GENERAL PLAN
2	INDEX TO PLANS

LEGEND:

- Existing Structure
- Existing Rock Slope Protection to be removed
- Rock Slope Protection (1/2 Ton Class VII, Method A)

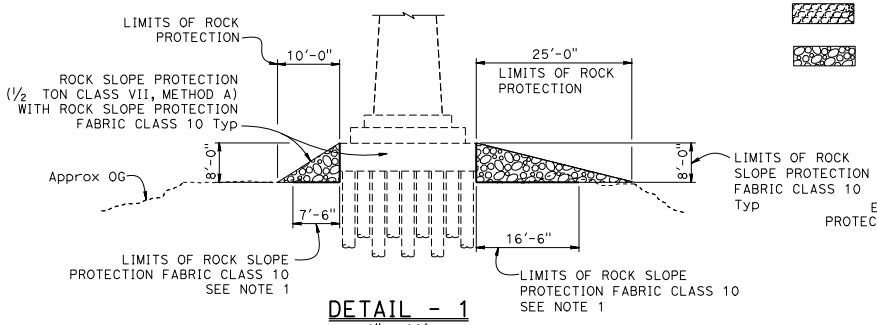

DETAIL - 1

1" = 10'

ROCK SLOPE PROTECTION

(AT PIER 2, PIER 5 OPPOSITE)

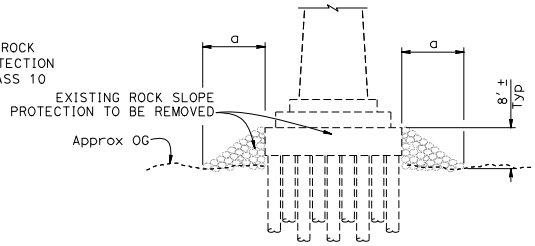

SECTION A-A

1" = 10'

Exist ROCK SLOPE PROTECTION

(TO BE REMOVED AT Exist PIERS)

CRITERIA

Design Based upon Final Hydraliics Report, Dated Nov 29, 2018

NOTES:

1. Place Rock Slope Protection Fabric Class 10 to the top of Existing footing
2. For location of "DETAIL-1" and "DETAIL-2" see "GENERAL PLAN" sheet

STANDARD PLANS 2018

A3A	ABBREVIATIONS (SHEET 1 OF 3)
A3B	ABBREVIATIONS (SHEET 2 OF 3)
A3C	ABBREVIATIONS (SHEET 3 OF 3)
A10A	LEGEND - LINES AND SYMBOLS (SHEET 1 OF 5)
A10B	LEGEND - LINES AND SYMBOLS (SHEET 2 OF 5)
A10C	LEGEND - LINES AND SYMBOLS (SHEET 3 OF 5)
A10D	LEGEND - LINES AND SYMBOLS (SHEET 4 OF 5)
A10E	LEGEND - LINES AND SYMBOLS (SHEET 5 OF 5)
A10F	LEGEND - SOIL (SHEET 1 OF 2)
A10G	LEGEND - SOIL (SHEET 2 OF 2)
A10H	LEGEND - ROCK

STANDARD PLAN SHEET NO.

DETAIL NO.

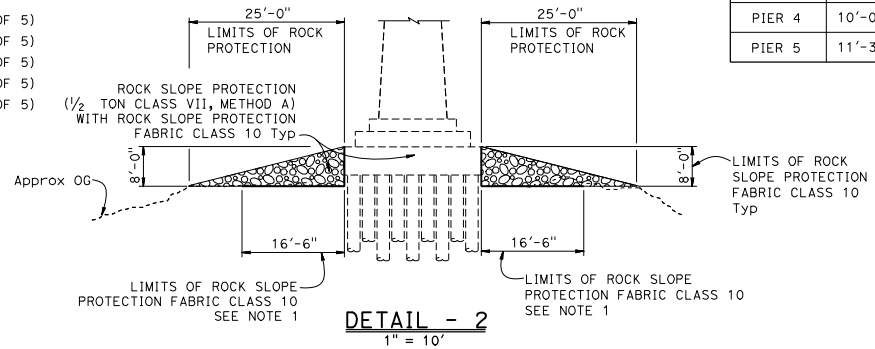

DETAIL - 2

1" = 10'

ROCK SLOPE PROTECTION

(AT PIER 3 & 4)

LOCATION	a	b
PIER 2	11'-3"±	22'-0"±
PIER 3	10'-0"±	24'-6"±
PIER 4	10'-0"±	24'-6"±
PIER 5	11'-3"±	22'-0"±

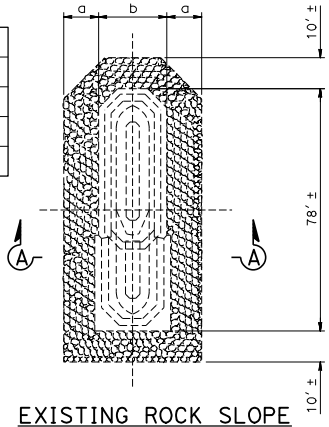

EXISTING ROCK SLOPE PROTECTION REMOVAL

1" = 20'

Exist ROCK SLOPE

(TO BE REMOVED AT Exist PIERS)

DESIGN	BY David Romero	CHECKED Randy Bains	
DETAILS	BY Min Yu	CHECKED Randy Bains	
QUANTITIES	BY David Romero	CHECKED Randy Bains	

STATE OF CALIFORNIA DEPARTMENT OF TRANSPORTATION

DIVISION OF ENGINEERING SERVICES STRUCTURE DESIGN DESIGN BRANCH 13

BRIDGE No. 24-0001L POST MILE 44.47

SCOUR MITIGATION AMERICAN RIVER BRIDGE

INDEX TO PLANS

STRUCTURES DESIGN DETAIL SHEET (ENGLISH) (REVISION 5/8/2018)

DATE PLOTTED => 11-OCT-2019 TIME PLOTTED => 11:28
FILE => 24-0001l-a-ltp.dgn USERNAME => s148585

ORIGINAL SCALE IN INCHES FOR REDUCED PLANS 0 1 2 3

UNIT: 3586
PROJECT NUMBER & PHASE: 0313000136,1 CONTRACT No.: 03-3F5404

DISREGARD PRINTS BEARING EARLIER REVISION DATES

REVISION DATES 11-28-18 04-16-19 06-28-19

SHEET 2 OF 2

NOTICE TO MARINERS

Issued By:

CENTER FOR OPERATIONAL OCEANOGRAPHIC
PRODUCTS & SERVICES

1305 East-West Highway, N/OPS3
Silver Spring, MD 20910-3281
301-713-2815
Tide.Predictions@noaa.gov
https://tidesandcurrents.noaa.gov

NOAA is Discontinuing the Printed Tide Tables and Tidal Current Tables.

NOAA is ending the production of the printed Tide Tables and Tidal Current Tables publications.
The 2020 Tide Tables and Tidal Current Tables were the final printed editions.
There will not be NOAA printed Tide Tables and Tidal Current Tables publications for 2021.

NOAA is discontinuing the production of these annual publications due to: (a) recent changes by the U.S. Coast Guard in the interpretation of the requirements for predictions, no longer requiring these publications in paper format and (b) the availability of online and electronic services providing tide and tidal current predictions which meet the U.S. Coast Guard requirements for navigation, and support other activities along the U.S. coast.

Tide and Tidal Current predictions are available through NOAA's Center for Operational Oceanographic Products and Services (CO-OPS) online services:

- NOAA Tide Predictions: https://tidesandcurrents.noaa.gov/tide_predictions.html
- NOAA Current Predictions: https://tidesandcurrents.noaa.gov/noaacurrents/Regions

These online services provide predictions which equal or exceed the accuracy and availability of the predictions for domestic locations provided through printed publications, and provide additional capabilities allowing the predictions to better meet a variety of user needs. These online services provide predictions for the U.S. coasts. International predictions will not be available from the online services. Predictions for countries outside the U.S. may be obtained through the Oceanographic / Hydrographic agency in that country.

Contact NOAA's Center for Operational Oceanographic Products and Services (CO-OPS) with questions or for further information.
E-mail: Tide.Predictions@noaa.gov
Phone: 301-713-2815

Issued: November 1, 2020

Temporary Pier Lighting Paintersville Retrofit Project

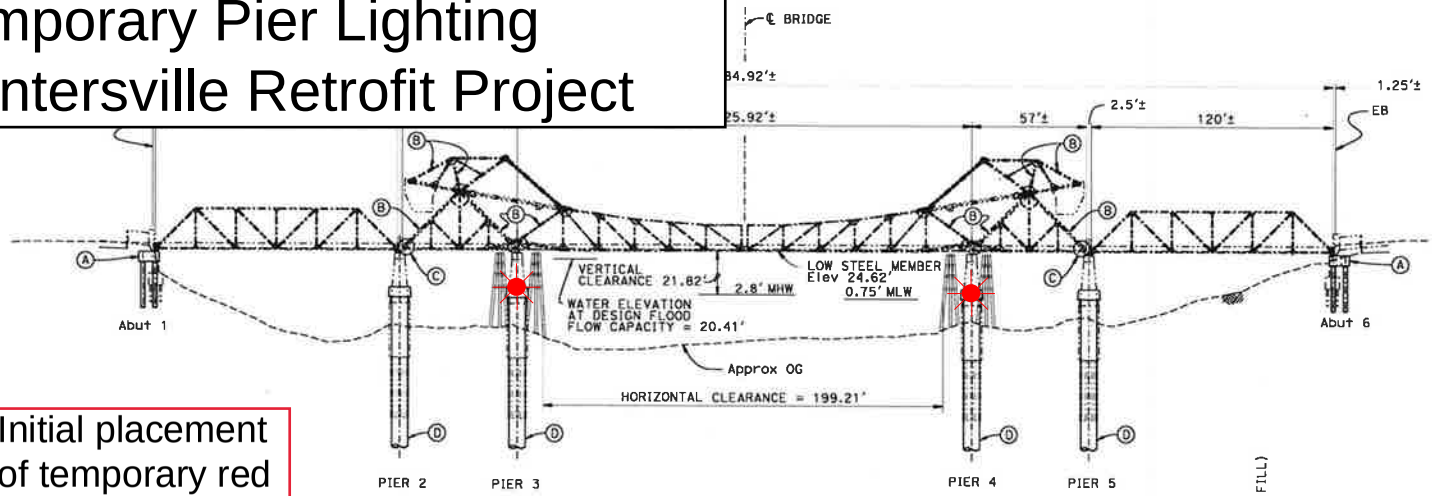

ELEVATION

LEGEND:

- (A) Abutment Retrofit
- (B) Strengthen Truss Member
- (C) Strengthen Connection
- (D) Pier Retrofit
- (E) Existing Dolphin to be removed
- (F) New 7 Pile Dolphin
- (G) For HYDROLOGIC SUMMARY see "FOUNDATION PLAN NO. 3" sheet
- Indicates new construction
- Indicates existing structure

Initial placement of temporary red lights before retrofit work.

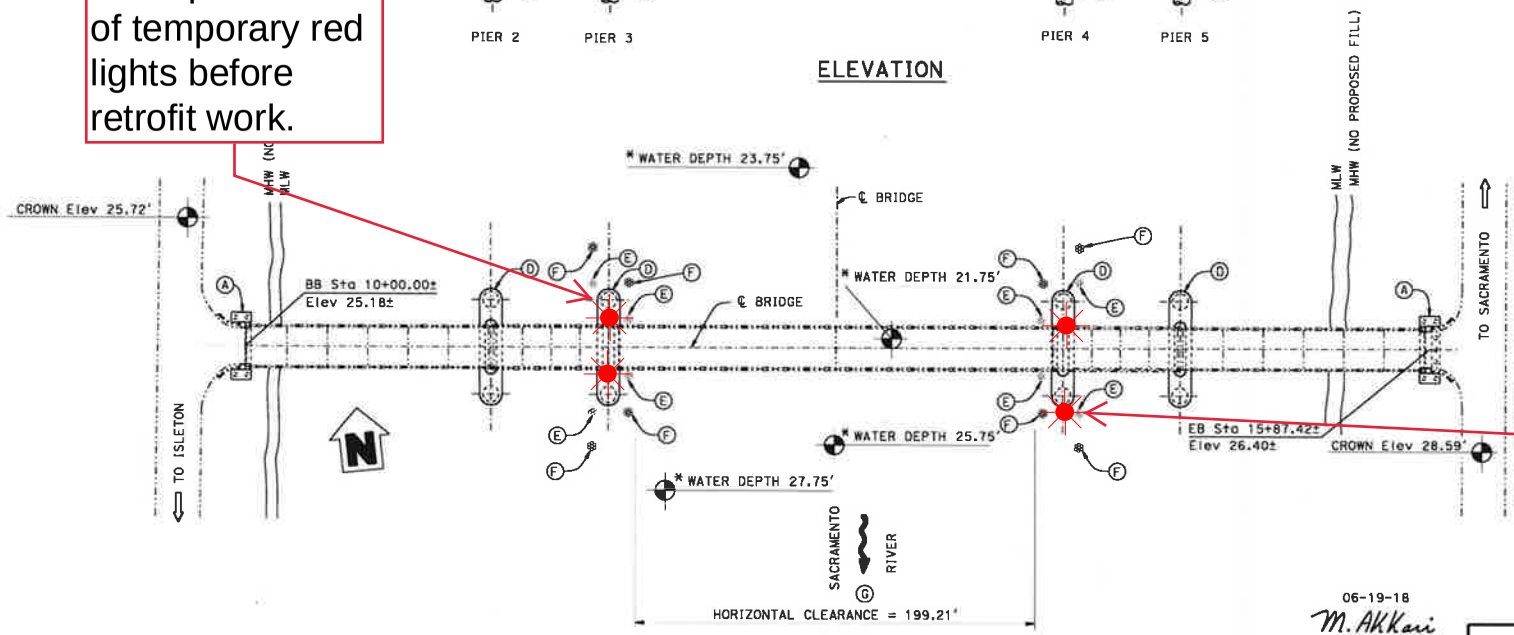

Temporary placement of red lights after pier retrofit work and before re-installation of permanent dolphins

The temporary all-round red lights will be installed on the upriver and downriver faces of piers 3 and 4 so as to be seen at 2,000 yard by approaching vessels. The pier face being worked on, where barges are obscuring the pier face, will not be required to be lit at night unless the barge is moved leaving the pier exposed.

06-19-18
M. Akkari

REGISTERED PROFESSIONAL ENGINEER
MOHAMED AKKARI
No. 44488
Exp. 3-31-20
CIVIL
STATE OF CALIFORNIA

STATE OF CALIFORNIA
DEPARTMENT OF TRANSPORTATION
PROPOSED PAINTERSVILLE BRIDGE
SEISMIC RETROFIT PROJECT
MILE 33.4, SACRAMENTO RIVER, NEAR COURTLAND

SHEET 2 OF 4

1-10-2018

Bridge Rehabilitation Project
Cibola Farmers Bridge, Mile 104.5, Colorado River
Alternative Navigation Channel During Project

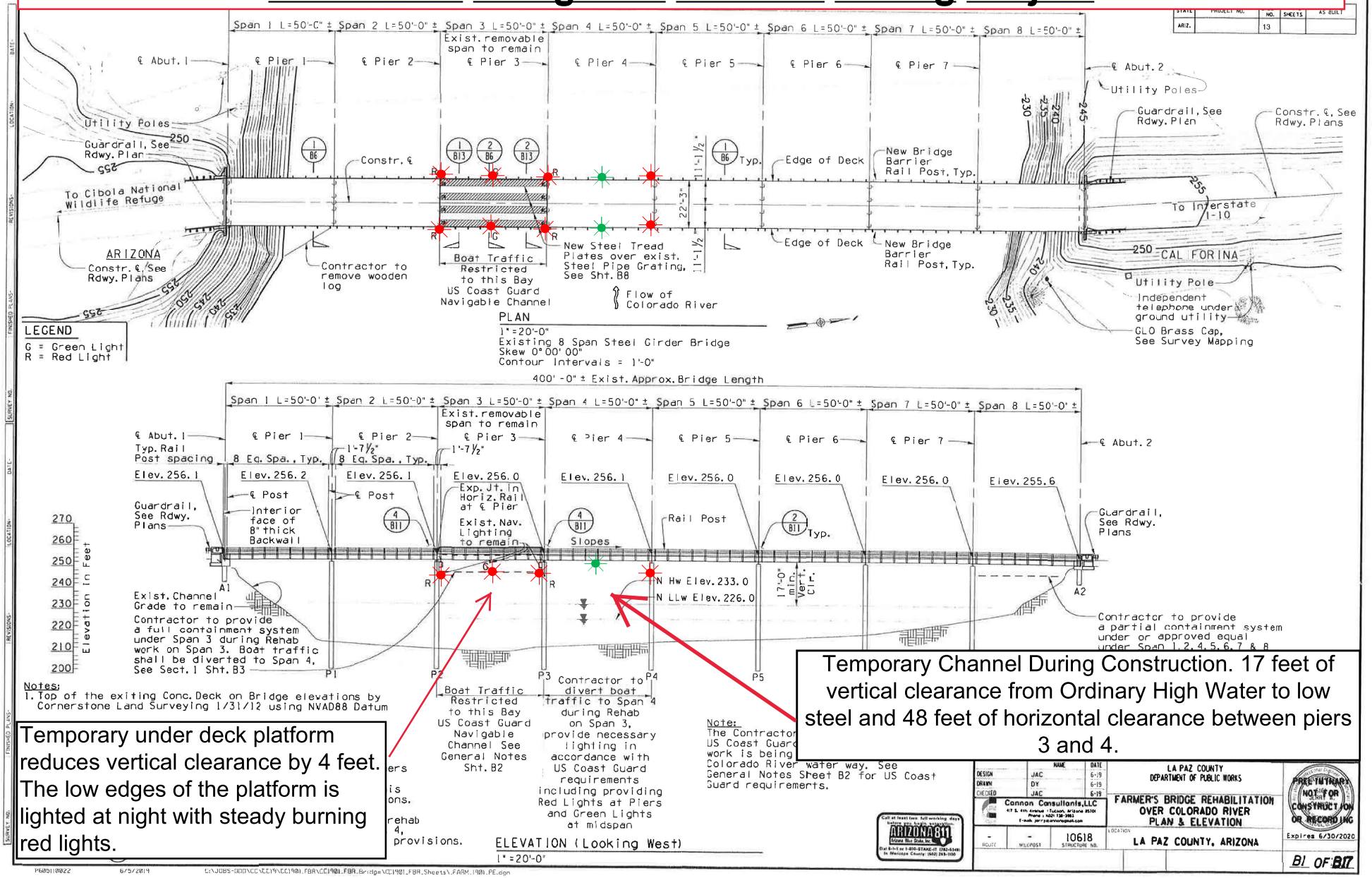

Temporary under deck platform reduces vertical clearance by 4 feet. The low edges of the platform is lighted at night with steady burning red lights.

Temporary Channel During Construction. 17 feet of vertical clearance from Ordinary High Water to low steel and 48 feet of horizontal clearance between piers 3 and 4.

Temporary Access Platforms
Golden Gate Bridge, Mile 2.5, San Francisco Bay
Revised 09 Nov 20

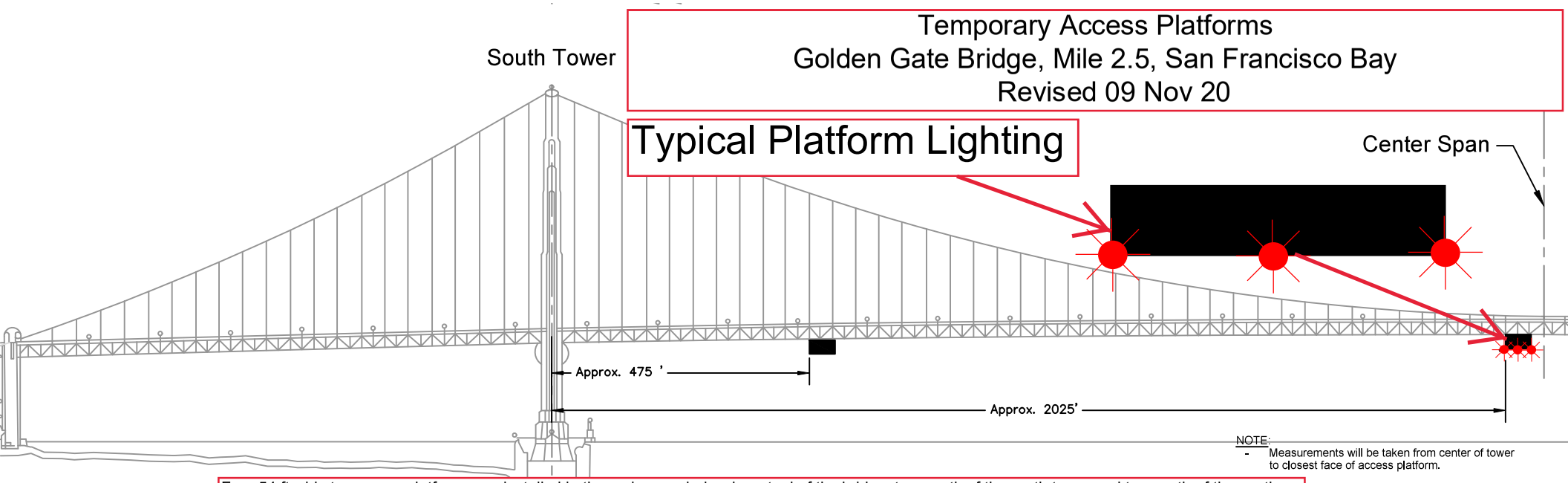

NOTE:
- Measurements will be taken from center of tower to closest face of access platform.

Four 54 ft wide temporary platforms are installed in the main span below low steel of the bridge, two south of the north tower and two north of the south tower, reducing vertical clearance by no more than 14 feet. The upstream and downstream lower edges of the temporary platform will be lighted at night with steady burning red lights visible at 2,000 yards by approaching vessels.

Temporary Access Platforms
Golden Gate Bridge, Mile 2.5, San Francisco Bay
Revised 09 Nov 20

Typical Platform Lighting

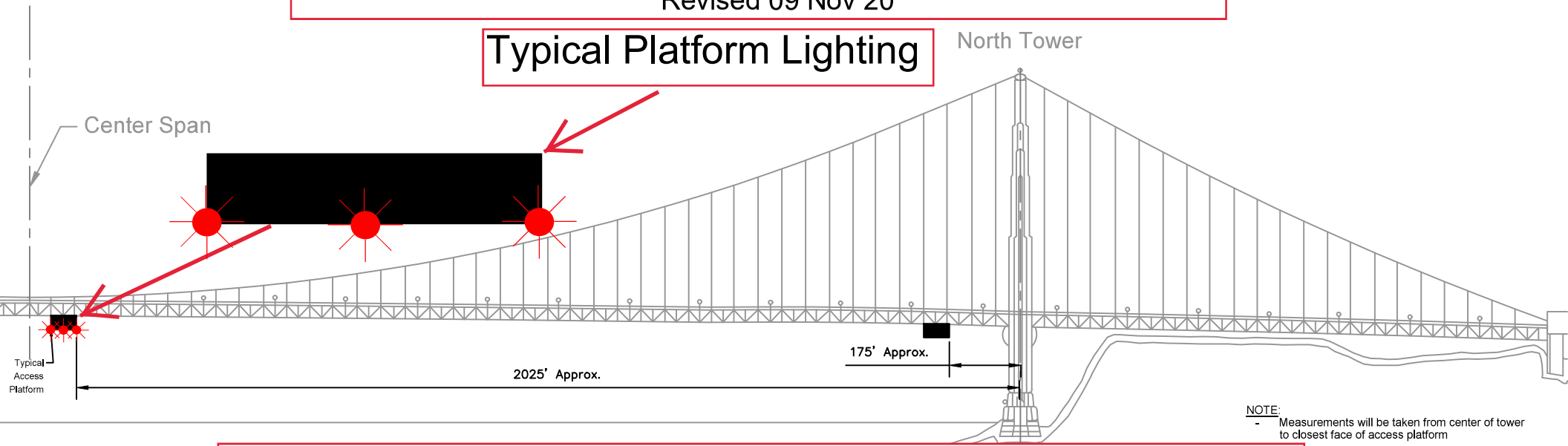

NOTE:
- Measurements will be taken from center of tower to closest face of access platform

Four 54 ft wide temporary platforms are installed in the main span below low steel of the bridge, two south of the north tower and two north of the south tower, reducing vertical clearance by no more than 14 feet. The upstream and downstream lower edges of the temporary platform will be lighted at night with steady burning red lights visible at 2,000 yards by approaching vessels.