U.S. Department
of Homeland Security

**United States
Coast Guard**

LOCAL NOTICE TO MARINERS

District: 11 Week: 46/20

CORRESPONDENCE TO:
COMMANDER
DISTRICT ELEVEN (DPW)
COAST GUARD ISLAND BUILDING 50-2
ALAMEDA, CA 94501-5100

REFERENCES: COMDTPUB P16502.6, Light List Volume VI, 2017 Edition, U.S. Chart No.1 12th Edition, and Coast Pilot Volume 7 49th Edition. These publications, along with corrections, are available at: https://nauticalcharts.noaa.gov/

BROADCAST NOTICE TO MARINERS - Information concerning aids to navigation and waterway management promulgated through BNM HB-0018-20, SF-0139-20, LA-0140-20, and SD-0061-20 have been incorporated in this notice, or will continue if still significant.

SECTION I - SPECIAL NOTICES

This section contains information of special concern to the Mariner.

SUBMITTING INFORMATION FOR PUBLICATION IN THE LOCAL NOTICE TO MARINERS

A complete set of guidelines with examples and contact information can be found at http://www.pacificarea.uscg.mil/Our-Organization/District-11/Prevention-Division/LnmRequest/ or call D11 Waterways Management Branch at 510-437-2980 or e-mail D11LNM@uscg.mil. Please provide all Local Notice to Mariners submissions 14 days prior to the start of operations.

BRIDGE INFORMATION- PROJECTS, DISCREPANCIES, CORRECTIONS & REGULATORY

For all bridge related issues, including lighting, operation, obstructions, construction, demolition, etc. contact the Eleventh Coast Guard District Bridge Administrator 24 hour cell phone at 510-219-4366. Flotsam may accumulate on and near bridge piers and abutments. Mariners should approach all bridges with caution. A vessel delay at a drawbridge may be reported to the District Bridge Administrator by telephone, or by using the Delay_Report_11-2017.pdf included in the Enclosures section of this Local Notice to Mariners.

BRIDGE INFORMATION-COMMUNICATIONS PROTOCOL-BENICIA/MARTINEZ UPRR BRIDGE- CARQUINEZ STRAIT

All mariners requiring a bridge lift at the Benicia-Martinez Union Pacific Railroad Bridge, mile 7.0, over the Carquinez Strait, California, should follow the protocol in the document entitled "Coordination of Communications for Union Pacific Railroad Lift Operations." Mariners can download a copy of the document by selecting the link BENICIA-MARTINEZ RR BRIDGE under the QUICK LINKS section at https://www.pacificarea.uscg.mil/vtssf.

CAUTION TO BE USED IN RELIANCE UPON AIDS TO NAVIGATION

The aids to navigation depicted on charts comprise a system of fixed and floating aids to navigation with varying degrees of reliability. Prudent mariners will not rely solely on any single aid to navigation, particularly a floating aid to navigation. With respect to buoys, the buoy symbol is used to indicate the approximate position of the buoy body and the sinker which secures the buoy to the seabed. The approximate position is used because of the practical limitations in positioning and maintaining buoys and their sinkers in precise geographical locations. These limitations include, but are not limited to, inherent imprecision in position fixing methods, prevailing atmospheric and sea conditions, slope of and the material making up the seabed, the fact that buoys are moored to sinkers by varying length of chain, and the fact that the buoy body and/or sinker positions are not under continuous surveillance, but are normally checked only during periodic maintenance visits which often occur more than a year apart. Due to the forces of nature, the position of the buoy body can be expected to shift inside and outside the charted symbol. The mariner is also cautioned that buoys may be extinguished or sound signals may not function as the result of natural causes, collisions, or other accidents. For the foregoing reasons, a prudent mariner must not rely completely upon the position or operation of floating aids to navigation, but will also utilize bearings from fixed objects and aids to navigation on shore. Furthermore, a vessel attempting to pass close aboard always risks collision with a yawing buoy or with the obstruction that the buoy marks.

HUMBOLDT BAY-SHOALING

Due to shoaling at the south jetty tip of Humboldy Bay Bar, swells in excess of 8 ft may adversely affect the main shipping channel. Mariners are requested to transit the area with caution. For more details of comments contact the United States Coast Guard Sector Humboldt Bay at 707-839-6113.

NORTHERN CALIFORNIA-SAN FRANCISCO-MILE ROCKS LIGHT-REDUCED NOMINAL RANGE

Mile Rocks Light (LLNR 365) will have a temporarily reduced intensity of 5nm until further notice. Mariners are requested to transit the area with caution. For more details or comments contact LT Ruth Sadowitz at 510-437-3801.

Charts: 18007 18010 18020 18022 18640 18645 18649 18680 LNM: 16/19

SAN DIEGO-SANTA BARBARA-OBSTRUCTION

There is flag pole located in front of Santa Barbara Harbor Breakwater light (LLNR 3750). The flag pole is approximately 8-10 ft away from the aid, extends about 4-5 ft above the light and is at a bearing of 062. There is a possibility that the flagpole may obscure the visibility of the light if mariners are approaching from that bearing. Mariners are requested to transit the area with caution. For more details or comments contact Sector San Diego at 619-278-7000.

LNM: 27/20

SOUTHERN CALIFORNIA- DANA POINT TO POINT ARGUELLO - VOLUNTARY SPEED REDUCTION

NOAA and the USCG request that all vessels 300 gross registered tons (GRT) or larger reduce speeds to 10-knots or less when transiting from Dana Point to Pt. Arguello until 30 Nov 20, to protect endangered whales; see enclosure VSRMap2020_SC2.pdf. These areas contain populations of endangered blue, humpback and fin whales that are federally protected under the Federal Endangered Species Act (16 USC 1538 et seq.), the Marine Mammal Protection Act (to protect endangered whales 16 USC 1361 et seq.), and the National Marine Sanctuaries Act (16 USC 1431 et seq.). Vessels already transiting south of the northern Channel Islands are also encouraged to transit outside of the voluntary extended area to be avoided to reduce the overlap of ships and endangered whales.

Please report any collisions with whales or any observed injured or dead whales to the U.S. Coast Guard on VHF Channel 16. NOAA is asking for the public's help in tracking whales. Please report sightings through WhaleAlert, a free application available at http://westcoast.whalealert.org.

Charts: 18700 18720 18740 LNM: 46/20

SOUTHERN CALIFORNIA-LONG BEACH

Long Beach Light (LLNR 125) is currently extinguished. A temporary green 7x17LR was established at position 33-43-25.306N, 118-11-9.06W with a FL G 2.5s characteristic to mark the channel. Coast Guard also established an AIS-AtoN signal at position 33-43-23.484N, 118-11-12.540W to mark the existing Long Beach Light to assist navigation. Mariners are requested to transit the area with caution. For more details or comments please contact Coast Guard Sector LA/LB Waterways Branch at 310-521-3860 or D11-SMB-SectorLALB-WWM@uscg.mil

LNM: 43/20

SOUTHERN CALIFORNIA-SAN DIEGO-SUBMERGED OBJECT

A large ship anchor and 300 ft of anchor chain have been reported lost in 39 ft of water one nautical mile west of Silver Strand State Beach at 32-38-24N 117-10-08W. Mariners are requested to transit the area with caution. For more details or comments contact sector San Diego at 619-278-7000.

Chart 18773 LNM: 27/20

SOUTHERN CALIFORNIA-SAN DIEGO-SUBMERGED OBJECT

An anchored 16 ft center console pleasure craft has capsized and remains afloat 600 yds south of Hotel Del Coronado at 32-40-06N 117-10-09W. No Distress is associated with this wreck which has been marked with an unlit red marker buoy in approximately 28 ft of water. Mariners are requested to transit the area with caution. For more details or comments contact Coast Guard Sector San Diego at 619-278-7000.

Chart 18772 LNM: 34/20

SECTION II - DISCREPANCIES

This section lists all reported and corrected discrepancies related to Aids to Navigation in this edition. A discrepancy is a change in the status of an aid to navigation that differs from what is published or charted.

DISCREPANCIES (FEDERAL AIDS)

LLNR	Aid Name	Status	Chart No.	BNM Ref.	LNM St	LNM End
1	Dart Tsunami Warning Lighted Buoy Station 46412	ADRIFT	18022	SD-0039-18	52/16	
90	Newport Bay West Jetty Light 3	SS INOP	18754	LA-0112-20	45/20	
125	Long Beach Light	LT EXT	18751	LA-0134-20	43/20	
365	Mile Rocks Light	REDUCED INT	18649	SF-0251-17	49/17	
380	Noonday Rock Lighted Bell Buoy 28	MISSING	18645	SF-0161-18	44/18	
415	Arena Cove Lighted Bell Buoy A	SINKING	18640	HB-0010-20	25/20	
562	NOAA Environmental Lighted Buoy 46027	MISSING	18603	HB-0008-19	17/19	
2295	Oceanside Breakwater Light 1	DAYMK MISSING	18758	SD-0020-19	16/19	

2440	Newport Bay West Jetty Light 3	SS INOP	18754	LA-0112-20	45/20
2670	Santa Catalina Island West End Light	LT EXT	18757	LA-0113-19	34/19
3012	Long Beach Light	LT EXT	18751	LA-0134-20	43/20
3970	Monterey Harbor Light 6	SS INOP	18685	SF-0064-20	27/20
4245	Mile Rocks Light	REDUCED INT	18649	SF-0251-17	49/17
4912	Lash Terminal Approach Lighted Buoy 2	SINKING	18650	SF-0040-20	16/20
5130	San Francisco Bay South Channel Light 8	DAYMK MISSING	18651	SF-0023-20	08/20
5250	Redwood Creek Light 16	STRUCT DMGD/TRLB	18651	SF-0109-19	43/19
5515	San Francisco Bay North Channel Lighted Buoy 14	MISSING	18649	SF-0074-20	29/20
5922	**Pinole Shoal Range Front Light**	**LT EXT**	**18654**	**SF-0138-20**	**46/20**
6165	Napa River Light 8	STRUCT DEST/TRLB	18654	SF-0123-14	34/14
6195	Napa River Light 15	DAYMK MISSING	18654	SF-0036-17	05/17
6506	Suisun Bay Buoy A	BUOY DMGD	18658	SF-0120-20	40/20
6913	Stockton Channel Light 1	STRUCT DMGD	18660	SF-0072-19	23/19
7235	Sacramento River Deep Water Ship Channel Light 15	MISSING/TRLB	18660	SF-0100-20	35/20
7240	Sacramento River Deep Water Ship Channel Light 16	STRUCT DEST/TRLB	18660	SF-0127-18	34/18
7525	Sacramento River Deep Water Ship Channel Range C Front Light 70	LT EXT	18662	SF-0083-20	30/20
7765	Bodega Harbor Approach Lighted Gong Buoy BA	MISSING	18643	SF-0090-20	32/20
8525	Lake Tahoe Buoy AB	DAYMK IMCH	18665	SF-0067-20	27/20

DISCREPANCIES (FEDERAL AIDS) CORRECTED

LLNR	Aid Name	Status	Chart No.	BNM Ref.	LNM St	LNM End
6780	San Joaquin River Light 29	WATCHING PROPERLY	18660	SF-0135-20	45/20	46/20
6855	San Joaquin River Light 46	WATCHING PROPERLY	18660	SF-0136-20	46/20	46/20
8300	Hookton Channel Range Rear Light	WATCHING PROPERLY	18622	HB-0018-20	45/20	46/20
8410	Lake Tahoe Buoy A	WATCHING PROPERLY	18665	SF-0114-20	39/20	46/20

DISCREPANCIES (PRIVATE AIDS)

LLNR	Aid Name	Status	Chart No.	BNM Ref.	LNM St	LNM End
20	Ocean Beach Pier Fog Sound Signal	SS INOP	18765	SD-0002-19	05/19	
158	Scripps Waverider Lighted Research Buoy 092	OFF STA	18746		45/18	
1765	Harbor Island East Basin Channel Buoy 2	OFF STA	18773	SD-0028-19	19/19	
1775	Harbor Island East Basin Channel Buoy 4	MISSING	18773	SD-0039-20	29/20	
1790	Harbor Island East Basin Channel Buoy 10	OFF STA	18773	SD-0044-19	27/19	
1900	Glorietta Bay Channel Lighted Buoy 8	LT IMCH	18773		50/18	
2070	Coronado Cays Channel Daybeacon 3	STRUCT DEST	18773	SD-0098-17	36/17	
2288	Scripps Waverider Lighted Research Buoy 220	OFF STA	18765	SD-0041-20	30/20	
2289.1	Scripps Waverider Lighted Research Buoy 100	OFF STA	18765		22/20	
2289.4	Scripps "CORDC" Lighted Research Buoy	MISSING	18765		22/20	
3339.2	REDONDO HARBOR LIGHT	LT EXT	18744	LA-0181-18	52/18	
3420	Hyperion Lighted Gong Buoy 10 ES	LT EXT	18744		16/20	
3972.1	Monterey Harbor Junction Lighted Buoy A	MISSING	18685	SF-0019-20	05/20	
4401	Richardson Bay Daybeacon 8	DAYMK DMGD	18653		15/20	

4402	Richardson Bay Daybeacon 9	STRUCT DMGD	18649	SF-0086-18	23/18
4465	San Francisco - Oakland Bay Bridge Pier G Fog Signal	SS INOP	18650	SF-0088-20	32/20
4578	South Beach Harbor South Entrance Light 1	LT EXT	18650	SF-0091-20	33/20
4826	Bay Farm Island Light 1	LT EXT	18650	SF-0014-19	05/19
4826.15	Bay Farm Island Light 3	LT EXT	18650	SF-0014-19	04/19
4827.1	Anchorage 9 Lighted Mooring Buoy A	LT EXT	18650	SF-0012-20	04/20
4828.1	Anchorage 9 Lighted Mooring Buoy B	LT EXT	18650	SF-0013-20	04/20
5005	**Brisbane Marina Light 6**	**LT EXT**	**18651**	**SF-0137-20**	**46/20**
5661	Southampton Shoal Outfall Lighted Buoy 1	LT EXT	18653	SF-0029-20	10/20
5661	Southampton Shoal Outfall Lighted Buoy 1	LT EXT/RAC INOP	18653	SF-0026-19	07/19
5877.2	San Rafael Rock Quarry Mooring Buoy C	MISSING	18653		36/18
6623	New York Slough Koch West Light	LT IMCH	18659		39/18
6624	New York Slough Koch East Light	LT EXT	18659		39/18
6645.5	Delta Diablo Outfall Lighted Buoy	BUOY DMGD	18659		39/18

DISCREPANCIES (PRIVATE AIDS) CORRECTED

LLNR	Aid Name	Status	Chart No.	BNM Ref.	LNM St	LNM End

None

PLATFORM DISCREPANCIES

Name	Status	Position	BNM Ref.	LNM St	LNM End

None

PLATFORM DISCREPANCIES CORRECTED

Name	Status	Position	BNM Ref.	LNM St	LNM End

None

SECTION III - TEMPORARY CHANGES and TEMPORARY CHANGES CORRECTED

This section contains temporary changes and corrections to Aids to Navigation for this edition. When charted aids are temporarily relocated for dredging, testing, evaluation, or marking an obstruction, a temporary correction shall be listed in Section IV giving the new position.

TEMPORARY CHANGES

LLNR	Aid Name	Status	Chart No.	BNM Ref.	LNM St	LNM End
280	Point Sur Light	Reduced Intensity	18686	SF-0105-20	35/20	
3775	Santa Barbara Harbor Lighted Buoy 7	RELOCATED FOR DREDGING	18725	LA-0057-20	16/20	
3785	Santa Barbara Harbor Lighted Buoy 11	RELOCATED FOR DREDGING	18725	LA-0058-20	16/20	
3792	Santa Barbara Harbor Lighted Buoy 12	RELOCATED FOR DREDGING	18725	LA-0059-20	16/20	
3855	Morro Bay Channel Lighted Buoy 4	DISCONTINUED FOR DREDGING	18703		18/20	
3856	Morro Bay Channel Lighted Buoy 4A	DISCONTINUED FOR DREDGING	18703		18/20	
3860	Morro Bay Channel Lighted Buoy 5	DISCONTINUED FOR DREDGING	18703		18/20	
3865	Morro Bay Channel Lighted Buoy 6	DISCONTINUED FOR DREDGING	18703		18/20	
3870	Morro Bay Channel Lighted Buoy 7	DISCONTINUED FOR DREDGING	18703		18/20	
3875	Morro Bay Channel Lighted Buoy 8	DISCONTINUED FOR DREDGING	18703		18/20	
6665	San Joaquin River Daybeacon 1	TRUB	18659	SF-0075-20	30/20	

8195	Humboldt Bay Lighted Buoy 9	RELOCATED FOR DREDGING	18622	37/20
8200	Humboldt Bay Lighted Buoy 10	RELOCATED FOR DREDGING	18622	37/20

TEMPORARY CHANGES CORRECTED

LLNR	Aid Name	Status	Chart No.	BNM Ref.	LNM St	LNM End

None

PLATFORM TEMPORARY CHANGES

Name	Status	Position	BNM Ref.	LNM St	LNM End

None

PLATFORM TEMPORARY CHANGES CORRECTED

Name	Status	Position	BNM Ref.	LNM St	LNM End

None

SECTION IV - CHART CORRECTIONS

None

SECTION V - ADVANCE NOTICES

This section contains advance notice of approved projects, changes to aids to navigation, or upcoming temporary changes such as dredging, etc. Mariners are advised to use caution while transiting these areas.

SUMMARY OF ADVANCED APPROVED PROJECTS

Approved Project(s) **Project Date** **Ref. LNM**

None

Advance Notice(s)

SOUTHERN CALIFORNIA-ANAHEIM BAY-TEMPORARY CHANGE

The U.S. Coast Guard will temporarily change the following aids to floating aids in regards to the Anaheim Bay Project:
Anaheim Bay Channel Light 9 LLNR (2820)
Anaheim Bay Channel Light 10 LLNR (2825)
Anaheim Bay Channel Light 11 LLNR (2826)
Anaheim Bay Channel Light 13 LLNR (2827)
Anaheim Bay Channel Light 17 LLNR (2829)
For more details or comments contact LT Ruth Sadowitz at 510-437-3801 or ruth.a.sadowitz@uscg.mil.

Chart 18749 LNM: 15/20

SOUTHERN CALIFORNIA-NEWPORT BAY CHANNEL-AID CONVERSION

The U. S. Coast Guard is proposing to make the temporary buoy for Newport Bay Channel Light 11 (LLNR 2470) a permanent buoy. For more details or comments contact LT Ruth Sadowitz, 510-437-3801 or ruth.a.sadowitz@uscg.mil.

Chart 18754 LNM: 46/19

SECTION VI - PROPOSED CHANGES

Periodically, the Coast Guard evaluates its system of aids to navigation to determine whether the conditions for which the aids to navigation were established have changed. When changes occur, the feasibility of improving, relocating, replacing, or discontinuing aids are considered. This section contains notice(s) of non-approved, proposed projects open for comment. SPECIAL NOTE: Mariners are requested to respond in writing to the District office unless otherwise noted (see banner page for address).

PROPOSED WATERWAY PROJECTS OPEN FOR PUBLIC COMMENT

Proposed Project(s) **Closing** **Docket No.** **Ref. LNM**

None

Proposed Change Notice(s)

SOUTHERN CALIFORNIA-CHANNEL ISLANDS-SOUND SIGNAL

The U.S. Coast Guard is proposing to change the sound signal at Channel Islands Harbor LT 2 (LLNR 3640). Currently, when activated by Marine

Radio Assisted Sound Signal, the signal sounds 1 blasts every 15 seconds for 30 minutes. Proposed change would make the signal sound 1 blast every 30 seconds for 15 minutes. Please direct questions, comments or concerns to LT Ruth Sadowitz, 510-437-3801 or ruth.a.sadowitz@uscg.mil.

Chart 18725 LNM: 42/20

SECTION VII - GENERAL

This section contains information of general concern to the Mariners. Mariners are advised to use caution while transiting these areas.

ARIZONA-BULLHEAD CITY-COLORADO RIVER-DAVIS DAM

A rocky shoal has been reported below the Davis Dam in position 35-11-34N 114-34-16W where depths are reported between 5' to less than 1' depending upon the outflow from the dam. Recreational vessels have been seen running aground after making contact with the rocks as there are no signs or buoys marking the area. Mariners are requested to transit the area with caution. For more details or comments contact USCG Sector San Diego at 619-278-7073.

LNM: 16/18

ARIZONA-COLORADO RIVER-BRIDGE

CIBOLA FARMERS BRIDGE-La Paz County is rehabilitating the bridge Monday through Friday during daylight hours, through 12 Aug 21. A temporary underdeck platform has been installed under span 3 reducing vertical clearance in that span by 4 feet. The main navigational channel is temporarily established in span 4, providing 17 feet vertical clearance over ordinary high water and 48 feet horizontal clearance between piers. Span 4 is marked with upstream and downstream green center channel lights and red pier lights. The upstream and downstream lower edges of the temporary underdeck platform is lighted at night with steady burning red lights (see Cibola_Alternate_Channel.pdf at the end of this notice). Mariners are requested to transit the area with caution. For conditions at the bridge project site mariners can contact 928-210-1913 or 928-897-1151. For more details or comments, contact the Coast Guard Bridge Office at 510-437-3461.

LNM: 40/20

LOWER COLORADO RIVER-PARKER, AZ-MARINE EVENT

SCSC Racing Enterprises will sponsor the 74th Annual Thanksgiving Regatta in Parker, AZ, in front of La Paz County Park at 34-13-41N 114-11-37W. The event will be from 0600-1800 through 26-29 Nov 20. The race will consist of 70 powerboats. Mariners are requested to transit the area with caution. For more details or comments contact Ross Wallach at 310-318-4012.

LNM: 46/20

NORTHERN CALIFORNIA-BENICIA MARINA-DREDGE OPERATIONS

Salt River Construction Corporation is conducting dredge operations in the Benicia Marina in Benicia, CA at position 38-02-36N 122-09-26W until 30 Nov 20. DB1 along with tug BRANDY BAR will be on scene monitoring VHF-FM Chan. 13, 14, and 77. Mariners are requested to transit the area with caution. For more details or comments contact Rick Moseley at 415-435-1024.

Chart 18657 LNM: 39/20

NORTHERN CALIFORNIA-BENICIA-DREDGE OPERATIONS

The Dutra Group will be conducting dredge operations at the Amports Benicia Pier at 38-02-30N 122-08-01W, 24 hours a day until 30 Nov 20. All dredged material will be disposed of at Montezuma Wetlands and SF-09. DB 24 or DB BEAVER, 04 split hull scows, along with tugs HEIDI BRUSCO, DREW FOSS and BECKY T will conduct operations and will monitor VHF-FM Chan. 13, 14, and 80. Mariners are requested to transit the area with caution. For more details or comments contact Chris Milam 415-218-6739.

Charts: 18655 18657 LNM: 44/20

NORTHERN CALIFORNIA-CHEVERON LONG WHARF-RICHMOND-DREDGE OPERATIONS

The Dutra Group will be conducting dredging operations at the Chevron Long Wharf in Richmond, CA at 37-55-18N 122-24-40W, 24 hours a day, 7 days a week until 30 Nov 20. All dredged material will be disposed of at MWRP, SF-10 or SF-11 in bay disposal site. DB 24, 04 split hull scows, 01 hopper scow, along with tow tug HEIDI BRUSCO and or SARAH REED, tender tug BECKY T or PHYLLIS T will conduct operations and will monitor VHF-FM Chan. 13, 14, and 80. Mariners are requested to transit the area with caution. For more details or comments contact Mr. Dennis Salyers at 415-497-5289.

Charts: 18649 18654 LNM: 41/20

NORTHERN CALIFORNIA-CLINT BASIN-PORT OF OAKLAND-MARINE CONSTRUCTION

Dutra Construction Company will conduct marine construction within Clint Basin at 37-47-18N 122-15-36W during weekdays and daylight hours until 01 Dec 20. CB-12 and small skiffs will be utilized during operations. All vessels will monitor VHF-FM Chan. 09 and 16 or by calling Robert Utley, Project Superintendent, at 415-686-9397. During off hours and weekends CB-12 will be moored adjacent to the wharf. Mariners are requested to transit the area with caution. For more details or comments contact Stephen Hutchinson at 510-254-4410.

Charts: 18649 18650 LNM: 38/20

NORTHERN CALIFORNIA-CORDELL BANK-SURVEY OPERATIONS

NOAA has deployed two research moorings in the following positions:
38-03-03N 123-27-24W
34-03-24N 123-29-09W
These are orange mooring buoys that have a flat surface float, flagpole, flag, and radar reflector. R/V MUSSEL POINT will be monitoring VHF-FM Chan. 16. Mariners are requested to transit the area with caution. For more details or comments contact Danielle Lipski at 415-464-5264.

Charts: 18010 18645 LNM: 52/18

NORTHERN CALIFORNIA-CORTE MADERA CREEK-BRIDGE

BON AIR RD BRIDGE REPLACEMENT-Construction of the replacement bridge is in progress. A temporary work trestle spans the channel and

NORTHERN CALIFORNIA-CORTE MADERA CREEK-BRIDGE

provides 20′ of horizontal clearance, pile to pile, and 3' of vertical clearance from mean high water to the lowest hittable portion of the trestle (see BonAirRd_Trestle.pdf at the end of this notice for navigation channel location). Four cofferdams have been placed within the creek to facilitate construction of the replacement bridge piers. Work will be conducted Monday through Saturday from 0700-1800. Mariners are requested to transit the area with caution. For conditions at the construction site, mariners can contact the contractor at 925-953-4610/916-919-2428 or the city at 415-259-7050. For more details or comments contact the Coast Guard Bridge Office at 510-437-3516.

Chart 18649 LNM: 41/18

NORTHERN CALIFORNIA-DELTA & RIVERS-AMERICAN RIVER-BRIDGE

DOWNSTREAM CA ROUTE 160 BRIDGE-Caltrans has completed replacement of the rock slope scour protection at each in-water pier. The scour slopes ~25 feet from the pier face into the navigation channel (See CA_RT_160_PierScourProtection.pdf drawing at the end of this notice for details.) Mariners should use the center of the navigation channel when transiting the bridge. For further information contact the Coast Guard Bridge Office at 510-437-3516.

Chart 18662 LNM: 42/20

NORTHERN CALIFORNIA-DELTA & RIVERS-MOKELUMNE RIVER-BRIDGE

I-5 DUAL BRIDGE-Caltrans' contractor has installed three temporary trestles to facilitate retrofit of the dual bridge, one upstream, one downstream and one between the dual bridge. The temporary trestles provide ~9 feet of vertical clearance from Mean High Water to low steel of each trestle and 30 feet of horizontal clearance between bents 2 and 3. The vertical clearance can fluctuate due to changes in the water surface elevation caused by runoff, snowmelt and dam releases. The upstream and downstream temporary navigation span, between bents 2 and 3, are lighted at night with steady burning green lights. The upstream and downstream faces of bents 1, 2, 3 and 4 are lighted at night with steady burning red lights (See I-5_MokeRiver_Trestles.pdf at the end of this notice for lighting diagram.) Work is being conducted Monday through Friday, 0600 to 1530,through 21 Jul 21. For information at the construction site mariners can contact 916-208-6416, 209-518-6936, 916-283-9949, 916-757-2989 or 530-409-8103. Mariners are requested to use extreme caution when transiting the work site as there will be cranes working over the channel. For further information, mariners can contact the Coast Guard Bridge Office at 510-219-4366.

Chart 18662 LNM: 37/20

NORTHERN CALIFORNIA-DELTA & RIVERS-PETALUMA RIVER-BRIDGE

SMART BLACKPOINT RAILROAD DRAWBRIDGE-The upstream fender system protecting the swing span has been destroyed and does not offer protection for vessels or the bridge. Mariners are urged to use caution while transiting the bridge. For more details or comments contact the Coast Guard Bridge Office at 510-437-3516.

Chart 18654 LNM: 35/20

NORTHERN CALIFORNIA-DELTA & RIVERS-SACRAMENTO RIVER-BRIDGE

ELKHORN FERRY (I-5) BRIDGE-The upstream clearance gauge is missing. For more details or comments contact the Coast Guard Bridge Office at 510-437-3514.

Chart 18664 LNM: 13/19

NORTHERN CALIFORNIA-DELTA & RIVERS-SACRAMENTO RIVER-BRIDGE

PAINTERSVILLE DRAWBRIDGE-Retrofit of the bridge is being conducted 0700 to 1900 Monday through Friday, through 23 Nov 20. Retrofit of the in-water piers is complete. Reinstallation of the dolphins has begun. A 60′ X 160′ crane barge, a 50′ X 160′ Kelso barge and a 50′ X 150′ material barge will be spudded down on-scene during the work. Barges will be unmanned, and remain on scene overnight. The upriver and downriver navigation channel piers will be lighted at night with steady burning all-round red lights. Falsework has been installed around all in-water piers. The falsework will extend 6.75′ into the bascule span from the face of piers 3 and 4. The channel-ward edge of the falsework does not extend past the tips of the bascule leafs when the bridge is in the open-to-navigation position. The upriver and downriver corners of the falsework will be lighted at night with steady burning all-round red lights. (See Temp_Lighting_Paintersville_Bridge.pdf at the end of this notice for temporary pier and falsework lighting.) For work conditions at the bridge and availability of the drawspan, mariners can contact the contractor at 916-208-6416 or 916-297-2037 or 415-755-5421. Please contact the Coast Guard Bridge Office at 510-437-3516 to comment on this project.

Chart 18662 LNM: 45/20

NORTHERN CALIFORNIA-DELTA & RIVERS-SACRAMENTO RIVER-BRIDGE

RIO VISTA DRAWBRIDGE-TRAFFIC GATE INSTALLATION-Temporary platforms are installed beneath low steel of the bridge in spans 2 and 8 reducing vertical clearance in those spans by no more than 4 feet. The upriver and downriver temporary platforms and associated support cables are lit at night with steady burning red lights (see RVBridge_PlatformCable_Lighting.pdf enclosure at the end of this notice.) At no time will the lift span of the bridge be impacted. Mariners are urged to use alternate spans of the bridge. For conditions at the bridge, mariners can contact the contractor at 925-260-2104 or 925-260-1884. For further information contact the Coast Guard Bridge Office at 510-437-3516.

Chart 18661 LNM: 45/20

NORTHERN CALIFORNIA-DELTA & RIVERS-SACRAMENTO RIVER-BRIDGE

PIONEER BRIDGE-Underdeck structural repairs will continue 2000 to 0500 from 30 Nov 20 to 04 Dec 20. A scooper truck, with an attachment arm and work platform, will be utilized for underdeck repairs, reducing bridge vertical clearance by no more than 10ft. The work platform will be lighted at night with fixed red lights. For navigational conditions at the project site, mariners can contact 916-801-6414 or 925-260-0403 or 925-457-5928. Mariners are requested to transit the area with caution. For more details or comments contact the Coast Guard Bridge Office at 510-437-3461.

Chart 18662 LNM: 45/20

NORTHERN CALIFORNIA-DELTA & RIVERS-SACRAMENTO RIVER-BRIDGE

"I" STREET BRIDGE-Through 30 Nov 20, the swing span of the bridge will open on signal, from 0900 to 1700, if at least a 2-hour notification is given to the drawtender. At all other times the swing span will open if at least a 4-hour notification is given to the drawtender. In the event of an emergency, the swing span will open as soon as possible with notification to the drawtender. For conditions at the bridge contact 916-789-5948 or 916-789-5947. For further information contact the Coast Guard Bridge Office at 510-437-3515.

Chart 18662 LNM: 45/20

NORTHERN CALIFORNIA-DELTA & RIVERS-THREE MILE SLOUGH-BRIDGE

NORTHERN CALIFORNIA-DELTA & RIVERS-THREE MILE SLOUGH-BRIDGE

THREE MILE SLOUGH BRIDGE-The lift span is secured in the closed-to-navigation position due to ongoing power supply issues. Estimated time of repair is unknown. When closed the navigation span provides 12 feet of vertical clearance at mean high water. Vessels able to transit the bridge while closed can continue to do so at any time. For more information contact the Coast Guard Bridge Office at 510-437-3516.

Chart 18661 LNM: 42/20

NORTHERN CALIFORNIA-HUMBOLDT BAY-HAZARDOUS CONDITIONS

Humboldt Bay entrance is observing a reduced deep draft limit to 34′ based on a +6′ tide until maintenance dredging can be performed. Hazardous conditions with breaking surf and heavy shoaling have been observed in the vicinity of Humboldt Bay Lighted Buoy 9 (LLNR8195). Mariners are requested to transit the area with caution and contact U.S. Coast Guard Sector Humboldt Bay on VHF-FM Chan. 16 for assistance. For more details or comments contact U.S. Coast Guard Sector Humboldt Bay at 707-839-6113.

Chart 18622 LNM: 50/18

NORTHERN CALIFORNIA-HUMBOLDT BAY-SUBMERGED BUOY

Two partially submerged spherical orange NOAA buoys last seen at 40-40-27N 124-28-00W in the NW corner of Eel Canyon are now missing with current location unknown. Mariners are requested to transit the area with caution and report any sightings to U.S. Coast Guard. For more details or comments contact Coast Guard Sector Humboldt Bay at 707-839-6113.

Chart 18620 LNM: 45/20

NORTHERN CALIFORNIA-MIDDLE RIVER-POTENTIAL OBSTRUCTION TO NAVIGATION

There is a potential obstruction to navigation in the Middle River at the entrance to Empire Cut at 37-58-18N 121-31-18W. The obstruction is a partially submerged metal pipe. Mariners are requested to transit the area with caution. For more details or comments contact LT Emily Rowan at 415-399-7443.

Chart 18661 LNM: 46/19

NORTHERN CALIFORNIA-MONTEZUMA-MARINE CONSTRUCTION

The Dutra Group is conducting marine construction at the Montezuma Slough salinity structure in Montezuma, CA, during daylight hours until 15 Dec 20. Towing and maneuvering of barges will be conducted 24 hours daily. Operations will be conducted within the following coordinates:
38-05-25N 121-53-07W
38-05-26N 121-53-02W
38-05-42N 121-53-15W
38-05-39N 121-53-20W
Crane Barge MORTY, a material barge, work boat, and a skiff will be in the area and all vessels will be monitoring VHF-FM Chan. 09 and 16. Mariners are requested to transit the area with caution. For more details or comments contact Jason Tse at 415-300-5336.

Charts: 18656 18659 LNM: 44/20

NORTHERN CALIFORNIA-MORRO BAY AND SAN LUIS OBISPO-WAMS

The U. S. Coast Guard is conducting a Waterways Analysis Management System (WAMS) study of Morro Bay and San Luis Obispo until 15 Dec 20 and can be found by using the following link:
https://www.surveymonkey.com/r/MorroBaySanLuisObispo. This questionnaire seeks to obtain data on the effectiveness of the system of Aids to Navigation in Morro Bay and San Luis Obispo, as well as other waterway safety concerns. This Coast Guard will use this information to ensure that the aids are serving their intended purpose. The Coast Guard also uses the concerns of waterways users to assist with other or future waterway management decisions. Any interested company or individual wishing to provide recommendations on existing or additional aids to navigation in this area are welcome to participate by submitting a user survey. To receive further information, contact District 11 Waterways, LTJG LaMartina at Gabriel.W.LaMartina@uscg.mil.

Charts: 18700 18703 LNM: 37/20

NORTHERN CALIFORNIA-MOSS LANDING-WAVEGLIDER DATA COLLECTION

Monterey Bay Aquarium Research Institute (MBARI) is conducting 24 hours per day 7 days a week autonomous, unmanned maritime vehicle operations of two Liquid Robotics, Inc. Wavegliders until 31 Dec 20. Vehicles will be deployed in the vicinity of Moss Landing that will operate continuously between latitudes 35-07-12N and 37-12-00N and will extend shoreward as far West as 122-58-35W. Operations consist of scientific ocean data collection. The Waveglider carries no fuel, lubricants or hydrocarbons. It is wave powered and remotely attended from MBARI, moving at speeds of ~1kt, and designed to give way or part if encountered by a vessel. It is approximately 6.5' x 2' (surfboard size), yellow in color, with a contact plaque and mast extending 3' above the water surface, supporting a flag. Mariners are requested to transit the area with caution. For more details or comments contact MBARI at 831-775-1700, waveglider@listserver.mbari.org or Liquid Robotics 24/7 WGOC Operations at 888-574-4574.

Chart 18685 LNM: 25/20

NORTHERN CALIFORNIA-NAPA RIVER-GEOTECHNICAL SAMPLING

Farallon Consulting will be conducting overwater geotechnical sampling in Dutchman Slough, Napa River until 30 Nov 20 between 38-09-12N 122-20-14W and 38-09-04N 122-20-14W. Two self-propelled pontoon vessels will be restricted in their ability to maneuver and will be monitoring VHF-FM Chan. 16. Mariners are requested to transit the area with caution. For more details or comments contact Steve Sullivan at 707-246-3696.

Chart 18654 LNM: 46/20

NORTHERN CALIFORNIA-OFFSHORE MONTEREY BAY-BUOY DEPLOYMENT

University of California, San Diego and the U.S. Army Corps of Engineers have deployed Lighted Waverider Research Buoy Station 029 (LLNR 5791) in position 37-56-12N 123-27-46W, approximately 22 nm west off Pt. Reyes, CA. The buoy is a 3' diameter sphere with an attached telemetry whip antenna and Fl (5) Y 20s light characteristic, the buoy is painted yellow and is marked "Wave Buoy". For more details or comments contact James Behrens at 858-534-3032.

Chart 18010 LNM: 44/19

NORTHERN CALIFORNIA-OFFSHORE MONTEREY BAY-BUOY DEPLOYMENT

NOAA has deployed two research buoys at the following coordinates:

NORTHERN CALIFORNIA-OFFSHORE MONTEREY BAY-BUOY DEPLOYMENT

36-07-03N 125-08-00W
36-01-40N 125-06-21W
These are 3' yellow octagonal research buoys with Fl W 4s light characteristics. Mariners are requested to transit the area with caution. For more details or comments contact Danny Devereaux at 206-526-6177.

Charts: 501 18010 18020 18022 LNM: 37/19

NORTHERN CALIFORNIA-PARADISE CAY YACHT HARBOR-DREDGE OPERATIONS

Salt River Construction Corporation is conducting dredge operations in the Paradise Cay Yacht Harbor in Belvedere Tiburon, CA at position 37-54-57N 122-28-29W until 30 Nov 20. DB2 along with tug BRANDY BAR and tug IRENE will be on scene monitoring VHF-FM Chan. 13, 14, and 77. SRCC will be deploying 150 ft of debris boom off the entrance channel spit running parallel east to west along the entrance channel of the Paradise Cay Yacht Harbor. Mariners are requested to transit the area with caution. For more details or comments contact Rick Moseley at 415-435-1024.

Chart 18653 LNM: 39/20

NORTHERN CALIFORNIA-PETALUMA RIVER-DREDGE OPERATIONS

Pacific Dredge & Construction will be conducting continuous dredging operations in Petaluma River between Black Point R.R. Bridge at 38-06-44N 122-30-05W and 38-04-15N 122-25-39W 24 hours a day, 7 days a week until 30 Nov 20. The Clamshell Dredge DB 180, anchor boat ADMIRAL, tug S BASS, along with dump scows PDC 2001 and PDC 2002 will be in the area and monitoring VHF-FM Chan. 13, 14, and 16. All dredge materials will be transported to nearby San Pablo Bay Disposal Site SF-10. Mariners are requested to transit the area with caution. For more details or comments contact Project Manager Matt MacArthur at 619-533-7932.

Chart 18654 LNM: 44/20

NORTHERN CALIFORNIA-PINOLE SHOAL-SHOALING

Pinole Shoal is observing a reduced deep draft on the south side edge of the channel in limited areas to 32.9' until maintenance dredging can be performed. For detail information on depths and locations please see https://www.spn.usace.army.mil/Missions/Surveys-Studies-Strategy/Hydro-Survey/Pinole-Shoals-Channel/ for the Army Corp Hydro Survey. Mariners are requested to transit the area with caution. For more details or comments contact D11 Waterways Management at 510-437-2980.

Charts: 18654 18655 LNM: 05/19

NORTHERN CALIFORNIA-PORT OF OAKLAND-DREDGE OPERATIONS

The Dutra Group will be conducting dredge operations at the Port of Oakland 24 hours a day, 7 days a week until 30 Nov 20. The outer harbor dredging will be between positions 37-48-20N 122-20-35W and 37-49-10N 122-18-34W. The inner harbor dredging will be between 37-47-54N 122-19-34W and 37-47-35N 122-17-42W. All dredged material will be disposed of at SF-DODS in position 37-39-00N 123-29-00W and SF-11 in position 37-45-30N 122-34-12W. DB 24, DB BEAVER, 04 split hull scows, along with tug HEIDI BRUSCO will conduct operations and will monitor VHF-FM Chan. 13, 14, and 80. Mariners are requested to transit the area with caution. For more details or comments contact Mr. Dennis Salyers at 415-497-5289.

Chart 18649 LNM: 39/20

NORTHERN CALIFORNIA-RICHARDSON BAY-MARINE CONSTRUCTION

Salt River Construction Corporation will be assisting with marine construction at a private residence in Richardson Bay, CA until 20 Dec 21. M/B YC42, C/B ALASKA, C/B MINK, along with the tug BRANDY BAR will be conducting operations. A mooring location will be located at 37-51-57N 122-27-54W. All vessels will monitor VHF-FM Chan. 13, 14, and 77. Mariners are requested to transit the area with caution. For more details or comments contact Rick Moseley at 415-435-1024.

Charts: 18649 18653 LNM: 50/19

NORTHERN CALIFORNIA-SACRAMENTO RIVER-MARINE CONSTRUCTION

Dutra Construction Company will conduct marine construction between the I Street Bridge and Tower Bridge at Raley's Landing in Sacramento, CA during daylight hours until 30 Nov 20. Crane barge 12 along with a work boat and small skiffs will be on scene monitoring VHF-FM Chan. 09, 16, and 68A. Mariners are requested to transit the area with caution. For more details or comments contact Todd Bruce at 707-974-9937.

Chart 18649 LNM: 41/19

NORTHERN CALIFORNIA-SACRAMENTO RIVER-REDUCED VERTICAL CLEARANCE

Overhead power cables upstream of Sacramento River at 38-03-54N 121-47-09W have a reported reduced vertical clearance to 119.5'.

Chart 18660 LNM: 22/16

NORTHERN CALIFORNIA-SACRAMENTO RIVER-SAN JOAQUIN RIVER–MARINE CONSTRUCTION

Dutra Construction Company will conduct marine construction in the vicinity of Sherman Island and Twitchell Island during daylight hours until 31 Dec 20. Crane barge 12, Crane barge KELSO, along with a work boat LINDA T and small skiffs will be utilized during operations. All vessels will monitor VHF-FM Chan. 09, 16, 77, and 80A. Mariners are requested to transit the area with caution. For more details or comments contact Jason Tse at 415-300-5336.

Chart 18656 LNM: 18/20

NORTHERN CALIFORNIA-SAN FRANCISCO BAY-BRIDGE

GOLDEN GATE BRIDGE-Four 54' temporary under deck platforms; one 475' and one 2025' north of the south tower and one 175' and one 2025' south of the north tower have been installed at the bridge. Temporary platforms reduce vertical clearance at the bridge by no more than 14'. As the work progresses, the two outer platforms will be moved towards the towers and the two inner platforms moved towards the centerline of the bridge. The bridge's maintenance travelers are in use during the project and will remain outboard of the furthest north and furthest south temporary platforms. The temporary platforms and maintenance travelers are lighted at night with all-round red lights (see PlatformLighting_GG_Bridge_09Nov20.pdf at the end of this notice). For navigational safety the maintenance travelers can be moved by contacting the Golden Gate Bridge at 415-923-2220. Work is being conducted Monday through Saturday, 0700-1700 and 2100-0500. For conditions at the bridge, mariners can contact the contractor at 415-716-0384. For more details or comments contact the Coast Guard Bridge Office at 510-437-3516.

Chart 18649 LNM: 45/20

NORTHERN CALIFORNIA-SAN FRANCISCO BAY-BRIDGE

SAN MATEO/HAYWARD BRIDGE-Structural repairs to the superstructure of the bridge are being conducted from 0700 to 1530, Monday through Friday, through 15 May 22. Current location of work is at piers 12, 13, 14, and 15. At no time will work be conducted or floating equipment placed in the main navigation span of the bridge, piers 19-20. Various size barges will be used during the project, the largest being a 100' X 20' flexifloat barge. During the work day, barges will either be spudded down or tied to the bridge piers, no anchors or anchor line will be utilized. After regular working hours, the unmanned barge will be left on-site unless inclement weather is anticipated, then the barges will be spudded down at pier 12, west of the main navigation span. For the safety of navigation, the barges can be moved with one-hour advance notice. For conditions at the bridge mariners can contact Golden State Bridge, Inc., on VHF-FM Marine Radio Channels 13, 14, and 16 or by cell phone at 707-246-0725, 925-260-2104, or 925-382-7288. For more details or comments contact the Coast Guard Bridge Office at 510-219-4366.

Chart 18651 LNM: 40/20

NORTHERN CALIFORNIA-SAN FRANCISCO BAY-DETERIORATING CONCRETE PILINGS

Deteriorating concrete pilings above and below the waterline are present in the vicinity of the the south edge of Southampton Shoal Light (LLNR 5480). Mariners are requested to transit the area with caution. For more details or comments contact LT Ruth Sadowitz at 510-437-3801 or ruth.a.sadowitz@uscg.mil.

Chart 18649 LNM: 23/15

NORTHERN CALIFORNIA-SAN FRANCISCO BAY-DREDGE OPERATIONS

The Dutra Group will be conducting dredge operations in the San Francisco West Marina Basin at 37-48-26N 122-26-34W, 16 hours a day, 7 days a week until 30 Nov 20. All dredged material will be disposed of in SF-8 at 37-45-24N 122-34-21W and Dutra San Rafael Rock Quarry at 37-59-15N 122-26-50W. DB 24 or DB BEAVER, 04 split hull scows, along with tug HEIDI L BRUSCO will conduct operations and will monitor VHF-FM Chan. 13, 14, and 80. Mariners are requested to transit the area with caution. For more details or comments contact Mr. Dennis Salyers at 415-497-5289.

Chart 18649 LNM: 44/20

NORTHERN CALIFORNIA-SAN FRANCISCO BAY-GEOTECHNICAL DRILL TESTING

Gregg Drilling and Testing will be conducting Overwater Geotechnical Investigations in San Francisco Bay between Pier 39 at 37-48-37N 122-24-46W and pier 45 at 37-48-34N 122-24-55W until 09 Dec 20 from 0700 to 1900. The R/V QUIN DELTA will be in the area conducting drill operations and monitoring VHF-FM Chan. 13, 14 and 16. Mariners are requested to transit the area with caution. For more details or comments contact Captain Tim O'Donnell at 949-254-5190 or at BEARatSEA@gmail.com

Charts: 18645 18649 LNM: 41/20

NORTHERN CALIFORNIA-SAN FRANCISCO BAY-MARINE CONSTRUCTION

Power Engineering Construction Company is conducting marine construction of the Treasure Island Ferry Terminal and north breakwater in San Francisco Bay, CA daily from 0600-1700 until 31 Dec 20. DB PACIFIC and RINGER will be on scene conducting operations and will utilize temporary anchorage locations at the following coordinates:

34-49-05N 122-22-24W
37-49-02N 122-22-22W
37-49-00N 122-22-21W
37-48-58N 122-22-37W
37-48-55N 122-22-32W
37-48-54N 122-22-31W
37-48-53N 122-22-28W

Temporary anchorage locations will be marked with 72" white round buoys with orange stripes and a flash characteristic of Fl W 2s. All vessels will monitor VHF-FM Chan. 14. Mariners are requested to transit the area with caution. For more details or comments contact Wayne Stonecipher at 510-502-1510.

Charts: 18649 18650 LNM: 38/19

NORTHERN CALIFORNIA-SAN FRANCISCO BAY-OAKLAND INNER HARBOR-SHOALING

Shoaling has been reported on the south side of Oakland Inner Harbor South Channel in the east passage through the Fruitvale Ave. Bridge. Mariners are requested to transit the area with caution and report any observed changes in shoaling conditions to the San Francisco VTS on VHF-FM Chan. 14. For more details or comments contact U.S. Coast Guard Sector San Francisco Waterways Management at 415-399-7443.

Chart 18650 LNM: 16/15

NORTHERN CALIFORNIA-SAN FRANCISCO BAY-PETALUMA RIVER

Shoaling has been reported east of Petaluma River Entrance Channel Daybeacon 3 (LLNR 5985) in position 38-03-33N 122-27-06W. Shoaling has been reported to be as shallow as 6" up to 15 yds east of the aid. Mariners are requested to transit the area with caution. For more details or comments contact LT Ruth Sadowitz at 510-437-3801 or ruth.a.sadowitz@uscg.mil.

Chart 18654 LNM: 41/18

NORTHERN CALIFORNIA-SAN FRANCISCO-GEOPHYSICAL SURVEY

USGS Pacific Coastal and Marine Geology Science Center (PCMSC) is conducting geophysical surveys in the vicinity of Ocean Beach in San Francisco, CA until 30 Apr 21 during daylight hours. Operations will be bounded by the following coordinates:

37-46-36N 127-31-47W
37-42-34N 122-31-47W
37-46-36N 122-30-11W
37-42-34N 122-30-11W

A bathymetric survey utilizing two personal watercraft will be used to conduct operations and they will be monitoring VHF-FM Chan. 16 and 83a. Mariners are requested to transit the area with caution. For more details or comments contact Tim Elfers at 831-460-7479.

Charts: 18640 18645 LNM: 43/20

NORTHERN CALIFORNIA-SAN FRANCISCO-GEOPHYSICAL SURVEY

The USGS Pacific Coastal and Marine Science Center is conducting a series of up to five one-day near shore geophysical surveys and up to three rapid-response surveys in Monterey Bay, CA until 01 Nov 21. A bathymetric survey using a two personal watercraft, each equipped with a 200 kHz single beam echo sounder, will be used to conduct cross shore transects from within the surf zone out to 1200m from shore to document the

NORTHERN CALIFORNIA-SAN FRANCISCO-GEOPHYSICAL SURVEY

effects of large wave events on seafloor morphology. For more details or comments contact Tim Elfers at 831-460-7479.

Charts: 18680 18685 LNM: 07/20

NORTHERN CALIFORNIA-SAN JOAQUIN RIVER-DREDGE OPERATIONS

Ross Island Sand & Gravel Co. is conducting dredge operations in the Stockton Deep Water Ship Channel 24 hours a day 7 days a week until 30 Nov 20. Dredge operations will start in the vicinity of False River in position 38-02-40N 121-40-52W and finish in position 37-59-46N 121-26-28W. A submerged dredge pipe will come ashore at the following positions:
First-38-04-08N 121-40-28W
Second-38-03-53N 121-33-42W
Third-38-01-45N 121-28-38W
D/V DREDGE 8 will conduct all dredge operations and will monitor VHF-FM Chan. 13, 16, and 79. Mariners are requested to transit the area with caution. For more details or comments contact Rod Oliva at 503-349-7436.

Chart 18660 LNM: 39/20

NORTHERN CALIFORNIA-SAN JOAQUIN RIVER-MARINE CONSTRUCTION

Shimmick Construction Company, Inc. (SCCI) is conducting marine construction for the Smith Canal Gate Project in the San Joaquin Deep Water Shipping Channel from 0600 to 1800 Monday through Saturday until 30 Nov 22. Operations will be conducted between the following coordinates:
37-57-31N 121-21-11W
37-57-25N 121-21-08W
Staging Yard
37-57-09N 121-19-55W
Mariners are requested to transit the area with caution. For more details or comments contact Tyler Shell at 510-393-0308.

Charts: 18661 18663 LNM: 28/20

NORTHERN CALIFORNIA-SAN JOAQUIN RIVER-MARINE OPERATIONS

Dixon Marine Services will be laying a submerged pipeline in the San Joaquin River at the entrance to Buckley Cove at 37-58-40N 121-22-56W until 31 Dec 20. 4′ x 8′ Warning boards with a light characteristic of Fl Y 1s will mark the position of the submerged pipeline. Survey vessel WIER II and CAT 324 long reach excavator will be on scene during operations. Mariners are requested to transit the area with caution. For more details or comments contact Dixon Marine Services at 415-669-7369.

Charts: 18660 18661 LNM: 31/20

NORTHERN CALIFORNIA-SAN LEANDRO BAY-BRIDGE

BAY FARM ISLAND HIGHWAY BRIDGE-The south side lower slat on the fender system is missing. Mariners are urged to transit the bridge with caution. The bridge owner is in the process of designing a replacement pier protection system. For more details or comments contact the Coast Guard Bridge Office at 510-437-3514.

Chart 18649 LNM: 37/18

NORTHERN CALIFORNIA-SAN PABLO BAY-DREDGE OPERATIONS

The Dutra Group will be conducting dredge operations at the Phillips 66 Marine Terminal in Rodeo at 38-03-37N 122-15-49W, 24 hours a day, 7 days a week until 30 Nov 20. All dredged material will be disposed of at SF-8 and Montezuma Wetlands. DB 24 or DB BEAVER, 04 split hull scows, tug BECKY T, along with tug HEIDI L BRUSCO will conduct operations and will monitor VHF-FM Chan. 13, 14, and 80. . Mariners are requested to transit the area with caution. For more details or comments contact Mr. Dennis Salyers at 415-497-5289.

Charts: 18654 18657 LNM: 46/20

NORTHERN CALIFORNIA-SAN PABLO BAY-SUBMARINE CABLE

Trans Bay Cable LLC owns and operates a charted submarine cable that experiences intermittent exposures in San Pablo Bay. All vessels are advised not to anchor, use ground tackle, fish, or dredge in the vicinity of 38-03-27N 122-16-22W as this increases the risk of damage violating 47 USC 2. Mariners are requested to transit the area with caution. For more details or comments contact Trans Bay Cable Operations Center at operator@transbaycable.com or 925-427-9744.

Charts: 18654 18655 LNM: 25/20

NORTHERN CALIFORNIA-SAN PABLO BAY-SUBMERGED OBSTRUCTION

There are submerged piles partially exposed above the sediment surface south of Pinole Shoal Channel along the 30' contour between 38-03-14N 122-16-26W and 38-03-18N 122-16-15W. The piles are present along the slope of the natural shoal at heights ranging from approximately 1' to 5' above the sediment surface. For more details or comments contact Todd Muelhoefer of Coscol Petroleum Corporation at 719-520-4761.

Charts: 18654 18655 LNM: 47/17

NORTHERN CALIFORNIA-SANTA CRUZ-DREDGE OPERATIONS

The Santa Cruz Port District will conduct dredge operations at the entrance to Santa Cruz Harbor, CA, from 0700-1600 until 30 Apr 20. A temporary yellow anchorage buoy with a light characteristic of F Y will be utilized outside of the navigational channel at 36-57-39N 122-00-00W. Dredge TWIN LAKES will monitor VHF-FM Chan. 08, 09, and 16. Mariners are requested to transit the area with caution and minimize wake in the vicinity of the dredge. For more details or comments contact Santa Cruz Harbor on VHF-FM Chan. 09 and 16 or at 831-475-6161.

Chart 18685 LNM: 44/20

NORTHERN CALIFORNIA-SANTA CRUZ-HAZARDOUS CONDITIONS

Santa Cruz Harbor is cautioning mariners of possible hazardous conditions with breaking surf and shoaling that may occur at Santa Cruz Harbor Entrance due to high surf and extreme tidal conditions in the vicinity of 36-57-37N 122-00-06W. Mariners are requested to transit the area with caution. For more details or comments contact Santa Cruz Harbor on VHF-FM Chan. 09 and 16 or at 831-475-6161.

Chart 18685 LNM: 46/17

NORTHERN CALIFORNIA-SOUTH SAN FRANCISCO BAY-WAMS

The U. S. Coast Guard is conducting a Waterways Analysis Management System (WAMS) study of the South San Francisco Bay until 25 Jan 21 and

NORTHERN CALIFORNIA-SOUTH SAN FRANCISCO BAY-WAMS

can be found by using the following link:
https://www.surveymonkey.com/r/SouthSFWAMS. This questionnaire seeks to obtain data on the effectiveness of the system of Aids to Navigation in the South San Francisco Bay, as well as other waterway safety concerns. This Coast Guard will use this information to ensure that the aids are serving their intended purpose. The Coast Guard also uses the concerns of waterways users to assist with other or future waterway management decisions. Any interested company or individual wishing to provide recommendations on existing or additional aids to navigation in this area are welcome to participate by submitting a user survey. To receive further information, contact District 11 Waterways, LTJG LaMartina at Gabriel.W.LaMartina@uscg.mil.

Charts: 18649 18651 LNM: 42/20

NORTHERN CALIFORNIA-SOUTHERN CALIFORNIA-MONTEREY BAY-CHANNELS ISLANDS-SUB-SURFACE OCEANOGRAPHIC INSTRUMENT MOORING

The United States Navy, Naval Postgraduate School, Oceanography Department have deployed sub-surface oceanographic instrument moorings until 01 Nov 21. These sub-surface moorings are part of the Monterey Bay and Channel Islands Sound Scape Monitoring Project. These sub-surface moorings are located at the following coordinates:
36-47-53N 121-58-34W
36-38-53N 121-54-30W
34-02-38N 121-54-30W
34-05-08N 120-31-24W
33-50-56N 120-07-06W
34-01-06N 119-19-00W
36-22-13N 122-18-53W
Mariners are requested to transit the area with caution. For more details or comments contact Keith Wycoff at 831-656-2567.

Charts: 18685 18700 18720 LNM: 48/18

NORTHERN CALIFORNIA-STOCKTON-MARINE CONSRUCTION

The Department of Water Resources is conducting marine operations in Mountain House, CA until 25 Nov 20 and is planning to remove the temporary rock barriers at the following locations:
Old River near Tracy barrier: 37-48-36N 121-32-35W
Grant Line Canal barrier: 37-49-10N 121-26-54W
Middle River barrier: 37-53-8N 121-28-56W
A small aluminum boat will be used on site. Mariners are requested to transit the area with caution. For more details or comments contact Jacob McQuirk at 916-653-9883

Chart 18661 LNM: 43/20

NORTHERN CALIFORNIA-SUISUN BAY-DREDGE OPERATIONS

The Dutra Group will be conducting dredge operations at the Marathon Oil Refinery-Avon Marine Terminal at 38-02-54N 122-05-32W, 24 hours a day, 7 days a week until 30 Nov 20. All dredged material will be disposed of at the Montezuma Wetlands. DB 24, 04 split hull scows, tug BECKY T, along with tug HEIDI L BRUSCO will conduct operations and will monitor VHF-FM Chan. 13, 14, and 80. Mariners are requested to transit the area with caution. For more details or comments contact Mr. Dennis Salyers at 415-497-5289.

Chart 18656 LNM: 46/20

NORTHERN CALIFORNIA-SUISUN MARSH-BOAT LOCKS

The California Department of Water Resources have installed flashboards across the maintenance channel at the Suisun Marsh Salinity Control Structure, located 2.2 nm from the easterly end of Montezuma Slough at 38-05-36N 121-53-07W. The boat lock will operate daily from 0700-1700 until 31 May 21. Signs and lights are currently posted to warn vessels to avoid the use of the maintenance channel on the east side of the facility. The boat lock signal is a standard traffic light. Whistle signals to request opening are two prolonged blasts followed by two short blasts. VHF-FM Chan. 13 will be monitored during hours of operation. The boat lock is located on the east side of the channel and provides the following clearances: 16 feet horizontally; 9' over the sill at MLLW; 70' in length between sector gates; and no vertical impairment. The piers will be marked by fixed red lights, and other parts of the structure will be marked by fixed yellow lights. Mariners should be aware a shoal area exists along the east bank on both sides of the structure extending approximately 50' out from the existing levee. Marker buoys have been placed to identify the area. Mariners are requested to transit the area with caution and be advised that the Salinity Control Structure operations can at times create currents at the site greater than currents in other areas of Montezuma Slough. For more details or comments contact Reza Shahcheraghi at 916-574-2299.

Chart 18656 LNM: 36/20

SOUTHERN CALIFORNIA-CATALINA ISLAND-BIOMASS RESEARCH

Marine BioEnergy INC. will be deploying a yellow research buoy with the characteristics of Fl Y 4s at 33-28-12N 118-29-33W and will remain at this position until 30 Jun 21. Mariners are urged to transit at their slowest safe speed to minimize wake and proceed with caution. For more details or comments contact Cindy Wilcox at 818-952-6018.

Chart 18757 LNM: 44/20

SOUTHERN CALIFORNIA-CATALINA ISLAND-BUOY DEPLOYMENT

Marine BioEnergy Inc. has deployed a temporary buoy near Catalina Island at 33-28-13N 118-29-33W. This will be a 7’ yellow buoy with Fl Y 4s light characteristic. Mariners are urged to transit at their slowest safe speed to minimize wake, and proceed with caution after passing arrangements have been made. For more details or comments contact Cindy Wilcox at 818-653-9017 or 818-952-6018.

Charts: 18746 18757 LNM: 47/19

SOUTHERN CALIFORNIA-CATALINA ISLAND-ROV OPERATIONS

Boeing is conducting ROV operations Northeast of Santa Catalina Island and within one nm position 33-26-23N 118-25-44W until 04 Dec 20. M/V BOLD HORIZON will be on scene and monitoring VHF-FM Chan. 16. Mariners are requested to keep 1000 yds distance from M/V BOLD HORIZON and transit the area with caution. For more details or comments contact the project manager Ross Peterson at 714-262-1580.

Chart 18757 LNM: 44/20

SOUTHERN CALIFORNIA-CHANNEL ISLAND HARBOR-DREDGE OPERATIONS

SOUTHERN CALIFORNIA-CHANNEL ISLAND HARBOR-DREDGE OPERATIONS

Manson Construction Co. will conduct hydraulic maintenance dredging of Channel Islands Harbor in position 34-09-21N 119-13-46W, 24 hours a day until 19 Jan 21. Dredge HR MORRIS, DB FREYA, dredge tender PUP, dredge tender CUB, and survey boat RUSTLER will monitor VHF-FM Chan. 16 and 67. Material will be transported through floating pipeline, submerged pipeline, and shore pipeline to the disposal area. Mariners are requested to transit the area with caution. For more details or comments contact Project Manager Max Oviedo at 206-619-7729.

Chart 18725 LNM: 39/20

SOUTHERN CALIFORNIA-CONSTRUCTION-SAN DIEGO-SAN DIEGO BAY

Manson Construction Co. is conducting construction activities in San Diego Bay at Naval Base San Diego Pier 8. This project includes demolition of the existing Pier 8 and rebuilding the Pier 8 replacement which will involve pile driving and pier construction utilizing derrick barges and flat barges. The approximate location of the project is 32-40-23N, 117-07-21W. This project is expected to be completed by 21 Apr 21. During construction operations, vessel operators with Manson Construction Co. can be contacted on VHF frequencies 13, 16, and 67. Mariners are requested to transit at their slowest safe speed to minimize wake while in the vicinity of construction operations and proceed with caution after passing arrangements have been made. For more details or comments contact Mr. Jack Fernandez at 904-495-4835.

Chart 18773 LNM: 20/20

SOUTHERN CALIFORNIA-DEL MAR NEARSHORE-BUOY DEPLOYMENT

Scripps Institution of Oceanography have deployed a buoy 1200 yds off the coast of Del Mar, CA at 32-57-23N 117-16-46W. The wave buoy is a 3' diameter sphere with an attached telemetry whip antenna and a yellow light FL (5) Y 20s. The buoy is painted yellow and marked "Wave Buoy" with the phone number 858-534-3032. Mariners are requested to transit the area with caution. For more details or comments contact James Behrens at 858-534-3032.

Charts: 18740 18765 LNM: 50/19

SOUTHERN CALIFORNIA-ENCINITAS-DREDGE OPERATIONS

Marathon Construction Corp. is conducting dredging and excavating channels within San Elijo Lagoon in the vicinity of 33-00-36N 117-16-30W until 28 Feb 21. The dredging equipment for the main channels will be a 16″ cutter-section with 8″ and 10″ cutter-section dredges being used in the smaller feeder channels. Dredges are anchored and marked with anchor buoys. Mariners are requested to transit the area with with caution at slow speeds to minimize wake. For more details or comments contact Project Manager Jon Ruth at 619-962-1480 or Dane Kost at 619-607-2682.

Chart 18774 LNM: 02/18

SOUTHERN CALIFORNIA-ESTERO BLUFFS STATE PARK-SUBMERGED ANCHOR CABLE

Mariners and surfers in the vicinity of North Cayucos are advised of an anchor cable extending from the surf zone to the grounded F/V POINT ESTERO in the vicinity of Estero Bluffs State Park 35-26-51N 120-55-09W. The anchor cable is marked with multiple orange fenders with the end of cable connected to the vessel. For more details or comments contact Coast Guard Sector LA/LB Command Center at 310-521-3815.

Chart 18703 LNM: 43/17

SOUTHERN CALIFORNIA-GROVER BEACH-GEOPHYSICAL SURVEY

FUGRO USA MARINE INC. will be conducting a Geophysical and Bathymetric Survey from 03-23 Dec 20 during daylight hours, offshore of Grover Beach, CA within the following coordinates:
35-05-56N 120-41-45W
35-06-10N 120-42-34W
35-07-09N 120-37-51W
35-07-34N 120-38-02W
The M/V JAB will be towing up to 300 ft of cable and will be monitoring VHF-FM Chan. 16. Mariners are requested to transit the area with caution. For more details or comments contact Eddie Stutts or Cindy Pratt at 805-650-7000.

Chart 18022 LNM: 46/20

SOUTHERN CALIFORNIA-IMPERIAL BEACH-WAVERIDER BUOY

University of California, San Diego and the U.S. Army Corps of Engineers have deployed a waverider buoy in position 32-34-10N 117-10-08W, approximately 2 NM off Imperial Beach, CA. The buoy is a 3' diameter sphere with an attached telemetry whip antenna and Fl (5) Y 20s light characteristic, the buoy is painted yellow and is marked “Wave Buoy”. For more details or comments contact James Behrens at 858-534-3032.

Chart 18765 LNM: 35/18

SOUTHERN CALIFORNIA-LOS ANGELES-SURVEY OPERATIONS

Vantuna Research Group is conducting sonar survey operations on the Palos Verdes Peninsula, Los Angeles, CA at 33-43-12N 118-20-42W until 28 Feb 21 during daylight hours. M/V NEOCLINUS will be conducting all operations and will monitor VHF-FM Chan. 16. Mariners are requested to transit the area with caution. For more details or comments contact Matt Robart at 541-231-9392.

Chart 18746 LNM: 38/20

SOUTHERN CALIFORNIA-MISSION BAY-MARINE CONSTRUCTION

Connolly-Pacific will conduct marine construction to Mission Bay North & Middle Jetties daily from 0700-1900 until 31 Dec 2020. D/B LONG BEACH will use anchors to position itself along the jetties in the following positions:
DB LONGBEACH-32-45-27N 117-15-36W
Anchor 1-32-45-29N 117-15-41W
Anchor 2-32-45-25N 117-15-41W
Anchor 3-32-45-27N 117-15-29W
Anchor 4-32-45-29N 117-15-29W
Mooring Can 1-32-45-59N 117-13-27W
Mooring Can 2-32-45-56N 117-14-33W
Round white cans will mark the location of anchors and are equipped with radar reflectors, and with a light characteristic of Fl W 2s. Mooring cans will be placed in Mission Bay Channel along Mariner’s Point Park before West Mission Bay Drive Bridge. The M/V PATCONA or M/V LARCONA will monitor VHF-FM chan. 13, 16, and 79A. The D/B LONG BEACH will monitor VHF-FM chan. 79A. Mariners are requested to transit the area with caution. For more details or comments contact Ron Allard at 562-577-0814 or Caleb Shen at 562-577-0735.

Chart 18765

SOUTHERN CALIFORNIA-MISSION BAY-MARINE CONSTRUCTION

LNM: 30/20

SOUTHERN CALIFORNIA-MONTEREY BAY-WAVE GLIDER

The Jupiter Research Foundation (JRF) in collaboration with Monterey Bay Aquarium Research Institute (MBARI) will be conducting 24/7 autonomous, unmanned maritime vehicle operations of four Liquid Robotics, Wave Gliders (www.liquidr.com) until 30 Jan 21. We plan to deploy the vehicles in the vicinity of Moss Landing that will operate continuously between latitudes 35-07-14 N and 37-12-00 N and will extend shoreward from as far West as 124 W longitude. Operations consist of scientific ocean data collection. Wave Glider carries no fuel, lubricants, or hydrocarbons, is wave powered, remotely attended from JRF or Liquid Robotics Wave Glider Operations Center (WGOC), moving at speeds of approximately 1.5kt, and designed to give way or part if encountered by a vessel transmitting AIS. It is approximately 10' x 2' (surfboard size), green/copper in color, with a contact plaque and mast extending 1 meter above the water surface supporting a flag. Mariners are advised to use caution when transiting the area. For further information, authorities and mariners can contact JRF operations at 650-947-9920, or Liquid Robotics 24/7 WGOC Operations at 888-574-4574, 408-636-4205.

Chart 18700 LNM: 29/20

SOUTHERN CALIFORNIA-OFF SHORE SAN DIEGO-USV OPERATIONS

Scripps Institution of Oceanography is conducting continuous autonomous, unmanned maritime surface vehicle operations offshore San Diego, CA until 31 Dec 20. Operations will be conducted within the following coordinates:
First- 33-29-24N 117-46-12W
Second- 31-57-07N 123-15-37W
Third- 30-59-40N 122-39-02W
Fourth- 32-52-14N 117-16-09W
Operations consist of scientific ocean data collection using 04 Wave Gliders. Wave Glider carries no fuel, lubricants, or hydrocarbons, is wave powered, remotely attended by CORDC personnel, moving at speeds of typically 1 kt, and designed to give way or part if encountered by a vessel. The vessels are surfboard size and black in color with a flag, radar reflector, and with a light characteristic of F1 Y 4s. Mariners are requested to transit the area with caution. For more details or comments contact Sophia Merrifield at 858-246-2585, smerrifield@ucsd.edu or Lisa Hazard at 858-822-2873, lhazard@ucsd.edu.

Charts: 18765 18774 LNM: 41/20

SOUTHERN CALIFORNIA-OFFSHORE LONG BEACH-OCEANOGRAPHIC OPERATIONS

The Scripps Institution of Oceanography R/V SALLY RIDE (Call Sign WSAF) will conduct oceanographic operations until 23 Nov 20 in two areas:
Area 1- within 75nm of 32-00-00N 122-00-00W
Area 2-
33-18-48N, 118-41-30W
33-12-24N, 118-13-24W
33-01-06N, 118-17-06W
33-08-06N, 118-45-30W
Operations in both areas include deployment and recovery of two yellow UCSD drift buoys Fl A 2s and an AIS transmitters and Drifting wave buoys Fl W 5s, 1m in diameter with wires below extending to the depth of 500m where a tensioning weight is located. Unmanned maritime surface vehicles will be deployed and are yellow or dark brown surfboard-sized with several masts extending up to 1m above the surface with a flag, radar reflector and a light Fl Y 4s. The vessel BOB & BETTY BEYSTER will be in the area assisting R/V SALLY RIDE and will be monitoring VHF-FM Chan. 13 and 16. Mariners are requested to transit the area with caution. For more details or comments contact Eric Buck at 858-534-5568.

Charts: 18022 18740 LNM: 42/20

SOUTHERN CALIFORNIA-OFFSHORE MONTEREY BAY-BUOY DEPLOYMENT

Scripps Institution of Oceanography have deployed a buoy offshore Monterey Bay, CA at 36-42-00N 122-20-33W. Station 185-Monterey Bay West-NDBC 46114 is a 3' diameter sphere with an attached telemetry whip antenna and a yellow light Fl Y 5(20)s. The buoy is painted yellow and marked "Wave Buoy" with the phone number 858-534-3032. Mariners are requested to transit the area with caution. For more details or comments contact James Behrens at 858-534-3032.

Chart 18680 LNM: 41/20

SOUTHERN CALIFORNIA-OFFSHORE POINT CONCEPTION-BUOY DEPLOYMENT

NOAA Pacific marine Environmental Lab have deployed a NOAA GPS buoy offshore Point Conception, CA at 34-27-24 N 120-40-49W. The buoy is a 3' yellow conical buoy with a Fl (4) Y 20s light characteristic. For more details or comments contact Chris Meinig at 206-526-6177.

Charts: 18700 18720 18721 LNM: 42/20

SOUTHERN CALIFORNIA-OFFSHORE SAN DIEGO-OCEANOGRAPHIC OPERATIONS

The Scripps Institution of Oceanography research vessel SALLY RIDE will conduct surface-to-floor oceanographic operations from 30 NOV 20 to 06 DEC 20 at the following coordinates:
First 33-03-00N 117-24-00W, on site approximately 48 hours
Second 32-12-18N 118-36-00W on site approximately 48 hours
Third 32-37-12N 120-42-54W, on site approximately 72 hours
Operations consist of over-the-side sampling with a variety of tethered instruments while vessel is stationary or towing at low speeds of less than 2 knots. R/V SALLY RIDE will monitor VHF-FM Chan. 13 and 16 and requests a minimum of 2 mile CPA. Mariners are advised to use caution when transiting the area. For further comments or details contact Eric Buck at 858-534-5568.

Charts: 18022 18740 LNM: 46/20

SOUTHERN CALIFORNIA-OFFSHORE SAN DIEGO-SAN CLEMENTE ISLAND-MILITARY OPERATIONS

The U.S. Navy will conduct continuous military operations offshore San Diego, CA, 24 hours a day, 7 days a week until 0100 30 Dec 20 within the following coordinates:
A.
32-33-00N 118-25-00W
32-35-00N 118-16-00W

SOUTHERN CALIFORNIA-OFFSHORE SAN DIEGO-SAN CLEMENTE ISLAND-MILITARY OPERATIONS

32-35-00N 117-40-00W
31-55-00N 117-40-00W
31-55-00N 118-25-00W
32-33-00N 118-25-00W
B.
32-52-40N 119-12-01W
33-08-04N 118-51-46W
32-08-04N 118-46-02W
33-05-37N 118-43-34W
32-58-53N 118-43-31W
32-47-38N 118-32-19W
32-36-55N 118-44-54W
32-36-55N 118-56-57W
C.
32-55-00N 118-25-00W
32-55-00N 118-15-00W
32-40-00N 118-15-00W
32-40-00N 118-35-00W
32-45-00N 118-35-00W

Mariners are requested to transit the area with caution. For more details or comments contact FACSFAC schedules at 619-545-1758.

Charts: 18740 18762 LNM: 04/20

SOUTHERN CALIFORNIA-OFFSHORE SAN DIEGO-SANTA CATALINA ISLAND-DIVING OPERATIONS

U.S. Navy Undersea Rescue Command will conduct dive operations offshore San Diego, CA 24 hours 07 days a week until 01 Jan 21 within 1 nm of the following coordinates:

32-51-57N 117-26-37W
33-23-26N 118-20-00W
32-47-00N 117-21-30W

The HOS DOMINATOR will be on scene monitoring VHF-FM Chan. 16. Mariners are requested to transit the area with caution and keep a safe distance of 1nm. For more details or comments contact ETVC Hickman at 619-545-9677.

Chart 18740 LNM: 29/20

SOUTHERN CALIFORNIA-PISMO BEACH-MARINE OPERATIONS

Orange Marine will be conducting marine operations along Pismo Beach, CA until 09 Dec 20. The cable ship RENE DESCARTES will be laying cable and clearing cable debris along the following coordinates:

35-07-16N 120-39-08W
35-07-15N 120-39-48W
35-05-57N 120-46-39W
35-05-39N 120-46-43W
35-05-27N 120-48-24W
35-05-43N 120-48-24W
35-08-35N 121-00-01W
35-20-54N 121-16-06W
35-21-19N 121-39-09W
35-16-47N 121-56-34W
35-15-39N 122-09-13W
35-19-39N 122-45-37W

Cable ship RENE DESCARTES along with a dive boat are staging in position 35-07-16N 120-39-08W and monitoring VHF-FM Chan. 12 and 16. Mariners are requested to transit the area with caution. For more details or comments contact Quenin Marcot at quentin.marcot@orange.com.

Charts: 18700 18703 LNM: 43/20

SOUTHERN CALIFORNIA-POINT CONCEPTION-WAVERIDER BUOY

University of California, San Diego and the U.S. Army Corps of Engineers have deployed a waverider buoy (Station 071-Harvest Buoy) in position 34-27-06N 120-46-48W, approximately 16 nm west of Point Conception, CA. The buoy is a 3' diameter sphere with an attached telemetry whip antenna and Fl (5) Y 20s light characteristic, the buoy is painted yellow and is marked "Wave Buoy". For more details or comments contact James Behrens at 858-534-3032.

Charts: 18700 18720 18721 LNM: 41/18

SOUTHERN CALIFORNIA-POINT CONCEPTION-WAVERIDER BUOY

University of California, San Diego and the U.S. Army Corps of Engineers have deployed a waverider buoy (Station 222-Santa Lucia Escarpment) in position 34-46-00N 121-29-48W, approximately 54 nm northwest of Point Conception, CA. The buoy is a 3' diameter sphere with an attached telemetry whip antenna and Fl (5) Y 20s light characteristic, the buoy is painted yellow and is marked "Wave Buoy". For more details or comments contact James Behrens at 858-534-3032.

Chart 18700 LNM: 41/18

SOUTHERN CALIFORNIA-POINT MUGU-BUOY DEPLOYMENT

Scripps Institution of Oceanography has deployed an atmospheric sampling buoy south of Point Mugu, CA in position 34-03-12N 119-09-47W. The yellow buoy will be exposed 12' above the waterline and will be flashing FL 1 Y 4s. For more details or comments contact Lisa Hazard at 858-822-2873.

Charts: 18720 18725 LNM: 26/18

SOUTHERN CALIFORNIA-PORTS OF LOS ANGELES/LONG BEACH-CERRITOS CHANNEL-BRIDGE

REPLACEMENT SCHUYLER HEIM BRIDGE CONSTRUCTION-Two temporary trestles are in place between the Henry Ford Railroad Bridge and the replacement bridge. The replacement bridge provides 75' of horizontal clearance and 45' of vertical clearance from mean high water to low steel.

SOUTHERN CALIFORNIA-PORTS OF LOS ANGELES/LONG BEACH-CERRITOS CHANNEL-BRIDGE

Work is taking place from 0600 to 1600, Mon-Fri. For conditions at the bridge, mariners can contact Caltrans at 562-572-5852, 310-882-3160, 949-394-9168, 310-715-9500; or the contractor at 818-489-5772, 909-322-4424. Mariners are requested to transit the area with caution. For more details or comments contact the Coast Guard Bridge Office at 510-437-3516.

Chart 18749 LNM: 38/20

SOUTHERN CALIFORNIA-PORTS OF LOS ANGELES/LONG BEACH-LA/LB HARBOR-BRIDGE

VINCENT THOMAS BRIDGE-Painting of the under deck of the bridge continues. A 180' long platform is being erected below low steel of the bridge, just to the east of the west channel margin red light, reducing vertical clearance by 5' 4". Once a 90' section is complete, that section of the platform will be moved to the east, in a leap frog technique. The platform will migrate towards the east until it reached 250' west of centerline of the bridge span. Each corner and every 50' along the upstream and downstream side of the platform will be lighted at night with steady burning red lights (see V_Thomas_Platform_Lighting1.pdf at the end of this notice). Work will take place during daylight hours, Monday through Friday. For conditions at the bridge mariners can contact 213-479-4138, 213-479-1144 or 310-261-9552. For more details or comments contact the Coast Guard Bridge Office at 510-437-3516.

GERALD DESMOND BRIDGE REPLACEMENT PROJECT-Underdeck platforms have been installed to conduct finishing work on the replacement bridge. The platforms are above low steel of the existing being replaced bridge. There is no reduction in vertical clearance in the navigation channel. For conditions at the work site, mariners can contact the contractor via marine radio on VHF-FM CH 13 and 79 or by cell at 424-230-9925. For more details view the website, www.NewGDBridge.com/Waterway, or contact the Coast Guard Bridge Office at 510-437-3516.

Chart 18749 LNM: 38/20

SOUTHERN CALIFORNIA-SAN CLEMENTE ISLAND-SAFETY ZONES

Mariners operating in the vicinity of San Clemente Island are reminded of the restricted waterway access surrounding San Clemente Island (33 CFR 165.1131; 33CFR 165.1141). Since the inception of the regulations, numerous safety zone violations have been processed by Coast Guard Sector San Diego. Safety Zone Incursions put the public at risk and cause costly and unnecessary training delays, as well as range cancellations. Violators of the San Clemente Island Safety and Security Zones are subject to monetary penalties. Criminal penalties may also be issued for repeated Safety and/or Security Zone violations. Failure to comply with the federal regulations could result in civil penalties of up to $90,901.00.
Furthermore, if a mariner holds a Merchant Mariner Credential, suspension or revocation action may be pursued against the mariner's credential.
For more details see MSSB 02-16 SCI Safety Zone.pdf in the enclosure section.

Chart 18762 LNM: 41/16

SOUTHERN CALIFORNIA-SAN DIEGO BAY-BRIDGE

CORONADO BAY BRIDGE MAINTENANCE-Scaffolding installed between piers 11-12, 12-13, and 13-14, reduces vertical clearance by more than 8'. The upstream and downstream lower edges of the scaffolding are lighted at night with red lights. For more details or comments contact the Coast Guard Bridge Office at 510-437-3461.

Charts: 18772 18773 LNM: 13/20

SOUTHERN CALIFORNIA-SAN DIEGO BAY-DREDGING OPERATIONS

R.E. Staite Engineering Inc. will be conducting dredging operations until 20 Nov 20 in San Diego Bay at position 32-41-18N 117-14-02W. Dredge DB PALOMAR and crew boat JOHN DRAKE will be performing dredging operations with tug CUYAMACA as well as support vessels CLARENCE D, HAROLD M, MIKE J and ROB P to assist the material and equipment barges to the work site. All vessels will be monitoring VHF-FM Chan. 16. Mariners are requested to transit the area with caution. For more details or comments contact Robbin Pepper at 619-524-8532 or Erick Myers at 619-233-0178.

Chart 18772 LNM: 38/20

SOUTHERN CALIFORNIA-SAN DIEGO BAY-MARINE CONSTRUCTION

R.E. Staite Engineering Inc. will conduct marine construction at NASSCO Graving Dock Cofferdam berth at position 32-41-16N 117-08-16W until 30 Nov 20. CB AMERICAN 11320 along with push boat JEANIE R will conduct operations. All vessels will monitor VHF-FM Chan. 16. Mariners are requested to transit at lowest safe speed to minimize wake and proceed with caution after passing arrangements have been made. For more details or comments contact project manager Erick Myers at 619-233-0178.

Charts: 18772 18773 LNM: 15/20

SOUTHERN CALIFORNIA-SAN DIEGO BAY-MARINE CONSTRUCTION

R.E. Staite Engineering Inc. is conducting marine construction at Huntington Ingalls Industries-Pier 7 Marginal Wharf at 32-41-36N 117-09-04W until 31 Dec 20. Vessels DB PALOMAR, RES 180, JOHN DRAKE, JEANIE R, and tug CUYAMACA will conduct operations. All vessels will monitor VHF-FM Chan. 16. Mariners are requested to transit at lowest safe speed to minimize wake and proceed with caution after passing arrangements have been made. For more details or comments contact project manager Erick Myers at 619-233-0178.

Charts: 18772 18773 LNM: 50/19

SOUTHERN CALIFORNIA-SAN DIEGO BAY-MARINE CONSTRUCTION

R.E. Staite Engineering Inc. will conduct marine construction at San Diego Bay waterfront in position 32-41-18N 117-14-02W until 31Dec 20. Vessel DB POINT LOMA along with dredge scows CLARENCE D, HAROLD M, MIKE J, ROB P, crew boat JOHN DRAKE and Tug CUYAMACA will be conducting operations and monitoring VHF-FM Chan 16. Mariners are requested to transit at lowest safe speed to minimize wake and proceed with caution after passing arrangements have been made. For concerns or comments contact project manager Robbin Pepper at 619-524-8532.

Chart 18773 LNM: 43/20

SOUTHERN CALIFORNIA-SAN DIEGO BAY-MARINE CONSTRUCTION

R.E. Staite Engineering Inc. will conduct marine construction at Huntington Ingalls Industries-Piers 2-5 at 32-41-36N 117-09-04W until 31 Dec 20. Vessels DB PALOMAR, RES 180, JOHN DRAKE, JEANIE R, and tug CUYAMACA will conduct operations. All vessels will monitor VHF-FM Chan. 16. Mariners are requested to transit at lowest safe speed to minimize wake and proceed with caution after passing arrangements have been made. For more details or comments contact project manager Erick Myers at 619-233-0178.

Charts: 18772 18773 LNM: 10/20

SOUTHERN CALIFORNIA-SAN DIEGO BAY-MARINE CONSTRUCTION

SOUTHERN CALIFORNIA-SAN DIEGO BAY-MARINE CONSTRUCTION

R.E. Staite Engineering Inc. will conduct marine construction at NASSCO Berths 09 and 10 at position 32-41-04N 117-08-24W until 31 Dec 20. DB PALOMAR along with push boat JEANIE R will conduct operations. All vessels will monitor VHF-FM Chan. 16. Mariners are requested to transit at lowest safe speed to minimize wake and proceed with caution after passing arrangements have been made. For more details or comments contact project manager Erick Myers at 619-233-0178.

Charts: 18772 18773 LNM: 15/20

SOUTHERN CALIFORNIA-SAN DIEGO BAY-MARINE CONSTRUCTION

R.E. Staite Engineering Inc. will conduct marine construction at NASSCO Berth 07 at position 32-41-35N 117-09-03W until 31 Dec 20. Vessel DB PALOMAR, RES 180, along with push boat JEANIE R in conjunction tug CUYAMACA will conduct operations. All vessels will monitor VHF-FM Chan 16. Mariners are requested to transit at lowest safe speed to minimize wake and proceed with caution after passing arrangements have been made. For concerns or comments contact project manager Erick Myers at 619-233-0178.

Charts: 18772 18773 LNM: 20/20

SOUTHERN CALIFORNIA-SAN DIEGO BAY-MARINE CONSTRUCTION

R.E. Staite Engineering Inc. will conduct marine construction at Naval Base Point Loma piers 5000 and 5003 at 32-41-18N 117-14-04W until 31 Dec 20. Vessels DB PALOMAR, RES 180, push boats JEANIE R, and tug CUYAMACA will conduct operations. All vessels will monitor VHF-FM Chan. 16. Mariners are requested to transit at lowest safe speed to minimize wake and proceed with caution after passing arrangements have been made. For more details or comments contact project manager Erick Myers at 619-233-0178.

Charts: 18772 18773 LNM: 14/20

SOUTHERN CALIFORNIA-SAN DIEGO BAY-MARINE EVENT

San Diego Yacht Club will sponsor the Hot Rum Series on 21 Nov 20 from 1100-1600 in San Diego Bay. The sailing race involving 75 vessels will start near San Diego Bay Channel Lighted Buoy 17 (LLNR 1630) at 32-42-19N 117-13-47W, proceeding out to the Coronado Roads and returning back to Buoy 17. Mariners are requested to transit the area with caution. For more details or comments contact Jeff Johnson at 619-933-9922 or VHF-FM Chan. 69 during the event.

Chart 18773 LNM: 45/20

SOUTHERN CALIFORNIA-SAN DIEGO BAY-MARINE EVENT

The annual San Diego Bay Parade of Lights consists of 80 power, sail, and hand powered boats participating in a boat parade from 1730-2030 on 13 Dec 20 and 20 Dec 20. The parade route will start near the west side of Shelter Island at 32-42-24N 117-13-56W, proceed past Embarcadero to the Coronado Bay Bridge, cross the main shipping channel and finish in the vicinity of the U.S. Navy Carrier Basin. There is a Coast Guard Special Local Regulation being enforced for the event. Mariners are advised to avoid this area and use due caution when transiting outside this area. For more details or comments contact Ralph Longfellow at 619-852-1856.

Charts: 18772 18773 LNM: 45/20

SOUTHERN CALIFORNIA-SAN DIEGO COUNTY-GEOGRAPHICAL SURVEY

Merkel & Associates will be conducting nearshore geographical survey operations along the shoreline between Encinitas and Del Mar, CA until 30 Nov 20. The operations will be conducted from a 22′ weldcraft surveying vessel. The surveying vessel will have limited mobility and will conduct parallel courses along the shoreline at slow speeds and will monitor VHF-FM Chan. 16. Mariners are requested to transit the area with caution. For more details or comments contact Keith Merkel at 858-560-5465.

Chart 18740 LNM: 32/20

SOUTHERN CALIFORNIA-SAN DIEGO RIVER-BRIDGE

WEST MISSION BAY DRIVE BRIDGE-The City of San Diego is replacing the existing bridge. A temporary work trestle, providing a vertical clearance of 8' over Mean Sea Level and open channels between silt curtains, is in place. Scheduled completion date of the bridge replacement project is November 2022. Mariners are urged to use caution while navigating the replacement bridge work site. For more details or comments contact the Coast Guard Bridge Office at 510-437-3461.

Chart 18765 LNM: 34/19

SOUTHERN CALIFORNIA-SAN DIEGO-MARINE CONSTRUCTION

Marathon Construction Corporation is conducting marine construction at Quaywall Piers 2 to 5 at Naval Base San Diego, CA at 32-39-44N 117-07-17W, until 01 Jan 21. A 60′ x 120′ crane barge will be spudded and anchored down adjacent to the quaywall. A 50′x100′ materials barge, 30′x60′ materials barge, and 28′x90′ materials barge will be moored adjacent to the crane barge on site. White anchor buoys with steady white lights will be utilized on site. Mariners are requested to transit at their slowest safe speed to minimize wake and proceed with caution when passing. For more details or comments contact Marathon Construction’s project manager Tim Meyer at 619-843-8975.

Chart 18773 LNM: 34/20

SOUTHERN CALIFORNIA-SAN DIEGO-MARINE CONSTRUCTION

The Army Corps of Engineers will conduct marine construction on Naval Base Coronado at 32-41-07N 117-13-11W until 15 Mar 21. The operation will on the beach and extend into the surf zone during high tide near runway 36 adjacent to the Pacific Ocean. Construction will consist of the replacement of existing lights and rip rap. Mariners are urged to transit at their slowest safe speed to minimize wake, and proceed with caution after passing arrangements have been made. For more details or comments contact LCDR Cody Keesee at 619-545-2144.

Chart 18773 LNM: 44/20

SOUTHERN CALIFORNIA-SAN DIEGO-MISSION BAY-MARINE EVENT

The annual Mission Bay Parade of Lights consists of 75 recreational vessels participating in a boat parade from 1800 to 2000 on 12 Dec 20. The parade route will start near Mariners Point at 32-45-21N 117-14-42W and proceed north to Sail Bay, round Vacation Island then finish in Fiesta Bay. There is a Coast Guard Special Local Regulation being enforced for the event. Mariners are advised to avoid this area and use due caution when transiting outside this area. For more details or comments contact Jason Proctor at 619-518-4455.

Charts: 18765 18773 LNM: 45/20

SOUTHERN CALIFORNIA-SAN DIEGO-OCEANOGRAPHIC SURVEY-OCEAN MONITORING

SOUTHERN CALIFORNIA-SAN DIEGO-OCEANOGRAPHIC SURVEY-OCEAN MONITORING

City of San Diego Marine Biology Lab is conducting year-round ocean monitoring sampling in the vicinity of South Bay Ocean Outfall and Point Loma Ocean Outfall until 30 Nov 20. Ocean sampling will be conducted within the following coordinates:

1.
32-31-55N 117-11-11W
32-32-11N 117-11-58W
32-32-04N 117-12-07W
32-32-33N 117-11-56W

2.
32-40-10N 117-19-23W
32-40-05N 117-19-34W
32-39-37N 117-19-32W
32-39-57N 117-19-39W
32-40-11N 117-16-56W

The M/V OCEANUS and M/V MONITOR III when in the area will monitor VHF-FM Chan. 16. Mariners are requested to transit the area with caution. For more details or comments contact Adriano Feit at 619-758-2377 or 858-882-7055.

Charts: 18765 18772 LNM: 46/19

SOUTHERN CALIFORNIA-SAN NICHOLAS ISLAND-ATMOSPHERIC BUOY

Naval Air Systems Command has deployed an atmospheric sampling buoy in position 33-15-30N 119-35-58W. The yellow buoy extends 10 ft above the waterline and is 4 ft in diameter, it is flashing F1 Y 4s. For further details or comments contact Kyle Edwards at 805-989-0672 or Robi Garcia at 805-989-5040.

Chart 18740 LNM: 18/20

SOUTHERN CALIFORNIA-SAN NICOLAS ISLAND-SANTA ROSA ISLAND-FISHING OPERATIONS

Ventura County Commercial Fisherman's Association member fishing vessels are conducting fishing operations in the vicinity of 33-35-13N 120-16-04W and 33-08-30N 119-52-03W. Fishing gear will be marked by colored floats up to 30 inches in diameter and high flyer pole with radar reflector and light. Mariners are requested to use caution when transiting the area. Vessels may be contacted on VHF-FM Chan. 11 or 16. For more details or comments contact Tim Athens at 805-448-4455.

Chart 18720 LNM: 42/19

SOUTHERN CALIFORNIA-SAN PEDRO-MARINE CONSTRUCTION

Jilk Heavy Construction Co. will conduct marine construction at the Port of San Pedro Waterfront Berths 74-84 at 33-44-13N 118-16-40W during daylight hours from 07 Dec 20 to 31 Jan 21. A crane barge along with several work skiffs will be in the area and monitoring VHF-FM Chan. 16. Mariners are requested to transit the area with caution. For more details or comments contact Joe Salgado at 310-505-0142.

Chart 18751 LNM: 46/20

SOUTHERN CALIFORNIA-SANTA BARABRA HARBOR-WAMS

The U. S. Coast Guard is conducting a Waterways Analysis Management System (WAMS) study of Santa Barbara Harbor until 15 Dec 20 and can be found by using the following link: https://www.surveymonkey.com/r/SantaBarbraHarbor. This questionnaire seeks to obtain data on the effectiveness of the system of Aids to Navigation in Santa Barbara Harbor, as well as other waterway safety concerns. This Coast Guard will use this information to ensure that the aids are serving their intended purpose. The Coast Guard also uses the concerns of waterways users to assist with other or future waterway management decisions. Any interested company or individual wishing to provide recommendations on existing or additional aids to navigation in this area are welcome to participate by submitting a user survey. To receive further information, contact District 11 Waterways, LTJG LaMartina at Gabriel.W.LaMartina@uscg.mil.

Chart 18725 LNM: 37/20

SOUTHERN CALIFORNIA-SANTA MONICA-BUOY DEPLOYMENT

A Waverider buoy has been deployed 1 NM South of Topanga Beach in position 34-01-19N 118-34-42W in 65 ft of water. The buoy will be deployed indefinitely. The buoy is operated by Scripps Institute of Oceanography. The buoy is a 3 ft diameter sphere with an attached telemetry whip antenna and a light characteristic of Fl Y (5+1)20s. The buoy is painted yellow and marked "Wave Buoy" with the phone number 858-534-3032. For further comments or details contact James Behrens at 858-534-3032.

Chart 18744 LNM: 34/20

SOUTHERN CALIFORNIA-VANDENBERG AFB-MILITARY OPERATIONS

Military operations will be conducted from Vandenberg AFB, CA from 0758-1158 through 21-25 Nov 20. Hazardous operation areas are bounded by the following coordinates:

A.
34-41-00N 120-37-00W
34-40-00N 120-40-00W
34-28-00N 120-39-00W
34-13-00N 120-29-00W
34-13-00N 120-14-00W
34-19-00N 120-18-00W
34-40-00N 120-18-00W

B.
33-47-00N 120-13-00W
31-29-00N 118-55-00W
31-03-00N 119-04-00W
30-47-00N 118-55-00W
30-40-00N 118-31-00W
30-52-00N 117-58-00W
31-15-00N 117-59-00W
31-30-00N 118-09-00W

SOUTHERN CALIFORNIA-VANDENBERG AFB-MILITARY OPERATIONS

31-33-00N 118-39-00W
33-47-00N 119-59-00W
Mariners are advised to remain clear of these areas for the duration of operations. For more details or comments contact Thomas Chiavacci at 805-605-3318.

Charts: 18700 18720 LNM: 43/20

SECTION VIII - LIGHT LIST CORRECTIONS

An Asterisk *, indicates the column in which a correction has been made to new information

(1) No.	(2) Name and Location	(3) Position	(4) Characteristic	(5) Height	(6) Range	(7) Structure	(8) Remarks

None

PUBLICATION CORRECTIONS

ANNOUNCEMENT – U.S. Coast Pilot® 7 and U.S. Coast Pilot® 10 - NEW EDITIONS – Spring 2020

U.S Coast Pilot 7 will be divided into two editions in the spring 2020 due to its large size. The following are the projected new editions that will be issued on the same date and ready for free download and weekly updates on
June 9, 2020, at nauticalcharts.noaa.gov/publications/coast-pilot/index.html.

PUBLICATION–National Oceanic Atmospheric Administration (NOAA) – U.S. Coast Pilot 7, Pacific Coast:
California 52nd Edition, 2020

PUBLICATION–National Oceanic Atmospheric Administration (NOAA) – U.S. Coast Pilot 10, Pacific Coast:
Oregon, Washington, Hawaii and Pacific Islands 1st Edition, 2020

Only Print-on-Demand bound copies are available for purchase; visit
nauticalcharts.noaa.gov/publications/print-agents.html#coast-pilot

For any questions or comments; visit
nauticalcharts.noaa.gov/customer-service/assist/

NOAA Office of Coast Survey's Nautical Publications Branch
April 2020

LNM: 18/20

ENCLOSURES

REPORT OF DELAY AT DRAWBRIDGE

Delay_Report_11-2017.pdf
Use link above to Report a Delay at a Drawbridge.

LNM: 06/07

SOUTHERN CALIFORNIA-PORTS OF LOS ANGELES/LONG BEACH-LA/LB HARBOR-BRIDGE

V_Thomas_Platform_Lighting1.pdf
See link above for platform lighting for Vincent Thomas Bridge.

LNM: 28/19

NORTHERN CALIFORNIA-CORTE MADERA CREEK-BRIDGE

BonAirRd_Trestle.pdf
See link above for Bon Air Rd Temporary Trestle Navigation Channel.

LNM: 29/18

NORTHERN CALIFORNIA-DELTA & RIVERS-SACRAMENTO RIVER-BRIDGE

RVBridge_PlatformCable_Lighting.pdf
RIO VISTA DRAWBRIDGE-See enclosure above for temporary platform location and lighting.

LNM: 22/20

SAN CLEMENTE ISLAND-SAFETY ZONES

San Clemente Safety Zone.pdf
See link above for Maritime Safety and Security Bulletin 001-19.

LNM: 49/19

ARIZONA-COLORADO RIVER-BRIDGE

Cibola_Alternate_Channel.pdf
CIBOLA FARMERS BRIDGE- See link above for temporary underdeck platform lighting and alternate navigation channel lighting.

LNM: 37/20

NORTHERN CALIFORNIA-SAN FRANCISCO APPROACH-SPEED REDUCTION

2020 NOAA WHALE.pdf
See enclousure above.

LNM: 18/20

SOUTHERN CALIFORNIA- DANA POINT TO POINT ARGUELLO - VOLUNTARY SPEED REDUCTION

VSRMap2020_SC2.pdf
See enclousre above.

LNM: 17/20

NORTHERN CALIFORNIA-DELTA & RIVERS-AMERICAN RIVER-BRIDGE

CA_RT_160_PierScourProtection.pdf
DOWNSTREAM CA ROUTE 160 BRIDGE-See link above for pier rock slope scour protection details.

LNM: 42/20

NOAA DISCONTINUE NOTICE FOR TIDE TABLE AND CURRENT TABLE

NOAA Discontinue Notice.pdf
See enclosure above.

LNM: 45/20

NORTHERN CALIFORNIA-DELTA & RIVERS-SACRAMENTO RIVER-BRIDGE

Temp_Lighting_Paintersville_Bridge.pdf
PAINTERSVILLE BRIDGE-See enclosure above for temporary pier and falsework lighting.

LNM: 38/20

NORTHERN CALIFORNIA-SAN FRANCISCO BAY-BRIDGE

PlatformLighting_GG_Bridge_09Nov20.pdf
GOLDEN GATE BRIDGE-Temporary Platform Location and Lighting revised 09 Nov 20.

LNM: 45/20

THE LOCAL NOTICE TO MARINERS IS AVAILABLE ON THE WORLD WIDE WEB AT HTTPS://WWW.NAVCEN.USCG.GOV

NEGRON-ALICEA.DAVID.1182661976

Digitally signed by NEGRON-ALICEA.DAVID.1182661976
Date: 2020.11.18 12:41:51 -08'00'

D. Negron-Alicea, CDR
U.S. Coast Guard
Chief Waterways Management Branch

U.S. COAST GUARD
REPORT OF DELAY AT DRAWBRIDGE
PER 33 CFR 117.5

BRIDGE NAME: _____ DATE: _____

MILE :_____WATERWAY: _____

1. Name/ Type of Vessel: _____Direction of Travel : _____
2. Vessel Owner (Name): _____
   (Address): _____
3. Name of Pilot (if applicable): _____
   (Address): _____
4. Time vessel signaled for bridge opening: _____
5. Location of vessel when signal was given: _____
6. Time and location of vessel when delay began: _____
7. Method of signal for bridge opening: ( ) Radio ( ) Sound ( ) Visual.
   (If sound or visual signal was used, specify:_____)
8. Time bridge operator acknowledged signal: _____
9. Method of bridge operator acknowledgement: ( ) Radio ( ) Sound ( ) Visual
   (If sound or visual signal was used, specify: _____)
10. Did bridge operator acknowledgement indicate the bridge,
    ( ) Could be opened immediately?
    ( ) Could not be opened immediately?
11. If land traffic crossed the bridge:
    Time land traffic started across the bridge _____
    Time land traffic stopped crossing the bridge _____
    Did land traffic stop on the bridge? _____
    Duration land traffic stopped on the bridge _____
12. Time drawbridge opened for navigation _____
13. Additional comments:
    _____
    _____
    _____

I certify the above information is true to the best of my knowledge and understand this statement may be used by the U.S. Coast Guard in levying fines against the bridge owner.

Signature _____

Telephone _____

Mariners may complete and return to:

Commander (dpw)
Eleventh Coast Guard District
Coast Guard Island, Building 50-2
Alameda, CA 94501-5100
Attn: Bridge Office

Fax: (510) 437-5836

Email: Carl.T.Hausner@uscg.mil

Questions? Please contact: Carl Hausner, Bridge Administrator, Eleventh Coast Guard District
Office: (510) 437-3516
Cell: (510) 219-4366

Mariners are reminded not to require bridge openings for appurtenances nonessential to navigation, per 33 CFR 117.11

Vincent Thomas Highway Bridge
Mile 3.0
Los Angeles/Long Beach Harbor
Painting Project

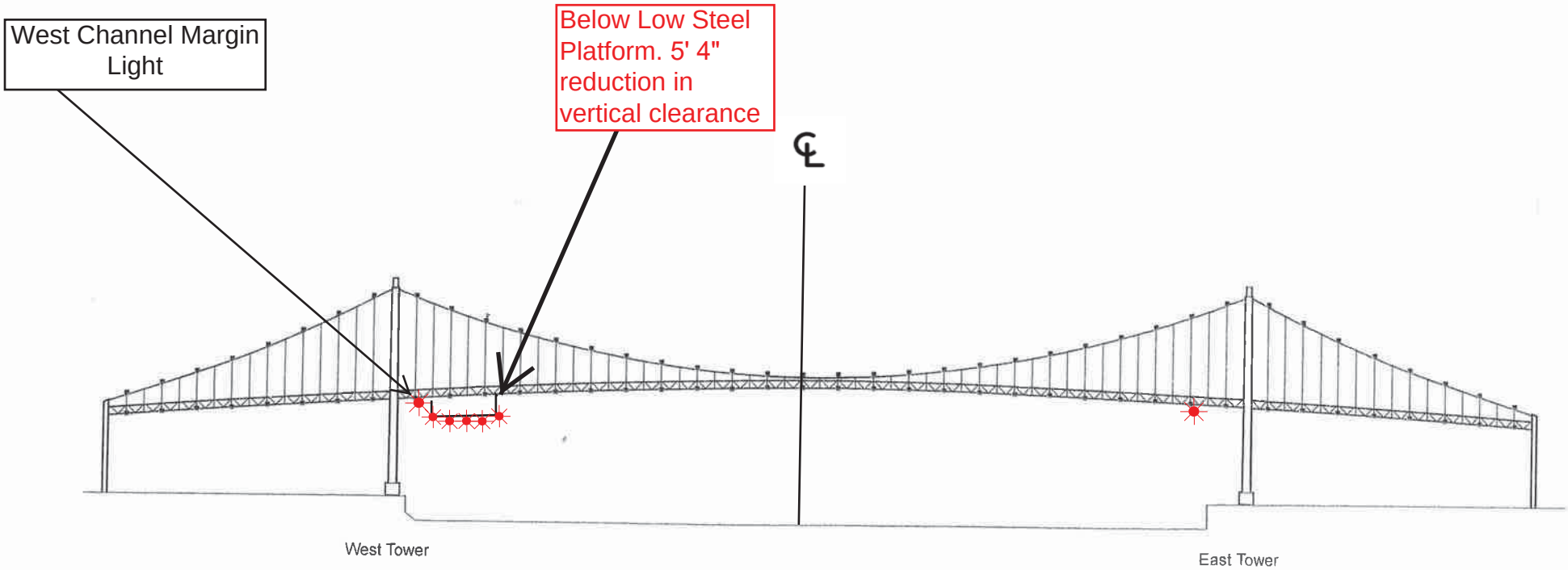

A 180 foot long under deck temporary platform will reduce vertical clearance by 5' 4". Each corner and every 50 feet along the the upstream and downstream side of the platform will lighted at night with steady burning red lights visible at 2000 yards by approaching vessels. In a duration of 1-year the platform will progress from the western channel margin light to 250' west of the centerline of the bridge.

Bon Air Rd Bridge Replacement Project
Mile 2.2, Corte Madera Creek

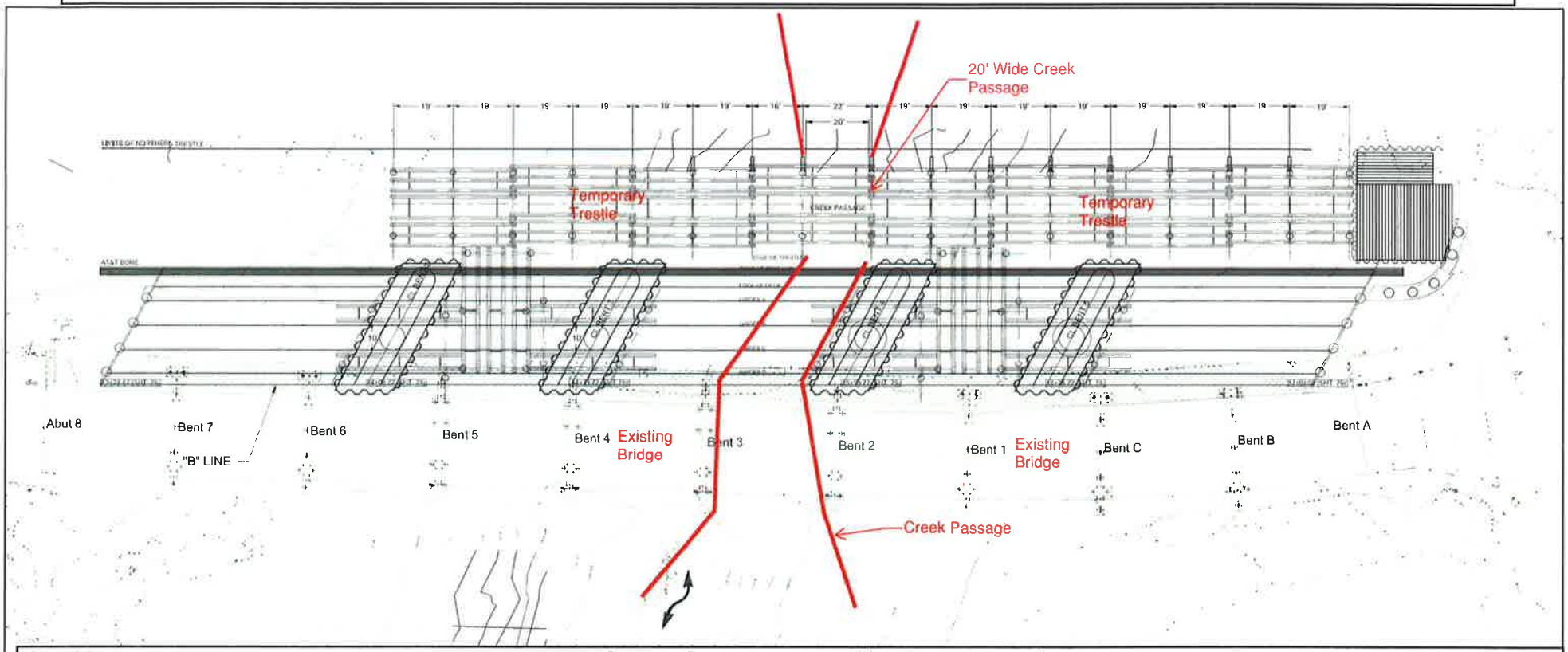

Cofferdams and a temporary trestle will be installed to facilitate construction of the replacement bridge. The temporary trestle will provide a center creek navigation channel with at least 20 feet of horizontal clearance and 3 feet of vertical clearance, from mean high water to the lowest hittable portion of the trestle, for waterway users. Mariners are urged to use extreme caution when transiting the construction site.

Temporary Underdeck Platform Lighting

Rio Vista Bridge

Mile 12.8, Sacramento River

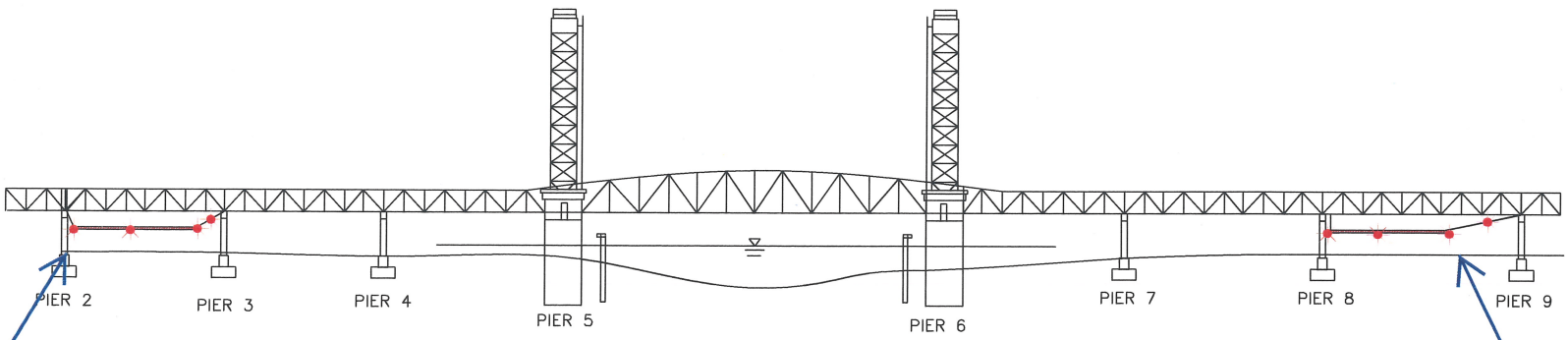

Two temporary platforms, and associated support cables, are installed beneath low steel of the bridge in span 2 and 8 and reduces vertical clearance in those spans by no more than 4 feet. The lower 4 corners and midpoint of each platform will be lighted at night with steady burning red lights, visible at 2,000 yards from approaching vessels. The support cable will be lighted with red lights every 50 feet. Mariners are requested to use alternate or main span of the bridge while these temporary platforms are in place.

STATE OF CALIFORNIA – DEPARTMENT OF TRANSPORTATION
Caltrans
FUNCTIONAL SUPERVISOR
CALCULATED – DESIGNED BY
CHECKED BY
REVISED BY
DATE REVISED
BORDER LAST REVISED 7/27/2010
USERNAME => $USER
DGN FILE => $REQUEST
RELATIVE BORDER SCALE IS IN INCHES
UNIT
PROJECT NUMBER & PHASE
LAST REVISED
DATE PLOTTED => $DATE
TIME PLOTTED => $TIME

Maritime Safety and Security Bulletin: 001-19

Effective Date: November 1, 2019

U.S. Coast Guard Sector San Diego
2710 North Harbor Drive
San Diego, CA 92101
Phone: (619) 278-7656
Fax: (619) 278-7235

SAN CLEMENTE ISLAND LIMITED ACCESS ADVISORY

Mariners operating in the vicinity of San Clemente Island are reminded of the **restricted** waterway access surrounding San Clemente Island according to Title 33, Code of Federal Regulations (CFR) Part 165.1131 and 33 CFR 165.1141).

Since the inception of the regulations, Coast Guard Sector San Diego has processed numerous safety zone violations. Safety Zone incursions put the public at risk and cause costly and unnecessary training delays, as well as range cancellations. Violators of the San Clemente Island Safety and Security Zones are subject to monetary penalties. Criminal penalties may also be issued for repeated Safety and/or Security Zone violations. Failure to comply with the federal regulations could result in civil penalties of up to $94,219 under 46 USC 70036(a). Furthermore, if a mariner holds a Merchant Mariner Credential, suspension or revocation action may be pursued against the mariner's credential.

San Clemente Island is a top strategic Department of Defense military training facility. Dangerous naval activities occur weekly to ensure deployable military forces are trained for worldwide missions (e.g. small arms training, ground and air explosive ordinance training). Mariners conducting operations around San Clemente Island must abide by Federal regulations that apply to the three NM radius around the island. Eight zones comprise the Safety and Security Zones. Restriction times are based on U.S. Navy live fire exercises. Wilson Cove Security Zone and Zone G of the Safety Zones are permanently closed. Mariners wishing to transit through Zone G must have preapproval from San Clemente Island. The U.S. Navy makes every effort to maintain a schedule in advance and minimize the restrictions to the public for water access around the island. Periods of enforcement can be found at https://www.scisland.org. Restricted access areas and times are highlighted in red and listed in the associated website chart. If a Safety Zone section is green, mariners may access the waters. Mariners are advised to contact San Clemente Island via call sign "KRAKEN" on VHF CH 82A, or call Coast Guard Sector San Diego Joint Harbor Operations Center on VHF CH16, or at (619) 278-7033 or 7656, to verify real time status of the restricted waters.

If you would like more information about the Security and Safety zones surrounding San Clemente Island, please contact the Coast Guard Sector San Diego Waterways Management Division at 619-278-7656 or by email at D11MarineEventsSD@uscg.mil

Sincerely,

T.J. BARELLI
Captain, U. S. Coast Guard
Captain of the Port San Diego

Bridge Rehabilitation Project
Cibola Farmers Bridge, Mile 104.5, Colorado River
Alternative Navigation Channel During Project

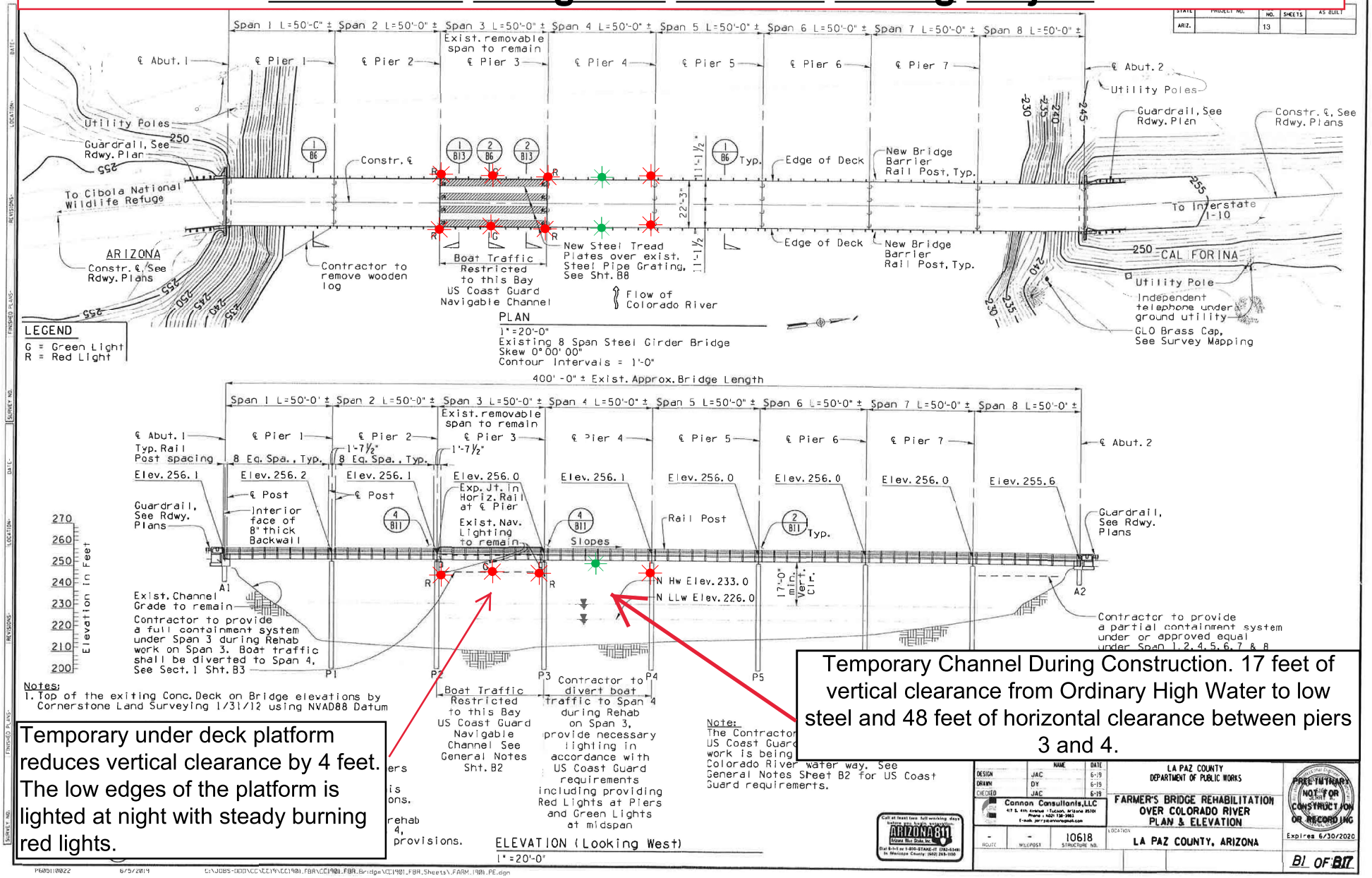

Temporary under deck platform reduces vertical clearance by 4 feet. The low edges of the platform is lighted at night with steady burning red lights.

Temporary Channel During Construction. 17 feet of vertical clearance from Ordinary High Water to low steel and 48 feet of horizontal clearance between piers 3 and 4.

U.S. Department of Homeland Security

United States Coast Guard

March 30, 2020

To: All Mariners

The National Oceanic and Atmospheric Administration (NOAA) with support from the United States Coast Guard (USCG) annually issues voluntary Vessel Speed Reduction (VSR) requests that go into effect May 1 off of San Francisco and May 15 off of southern California; please see the attached charts. The goal of these seasonal voluntary VSR zones is to reduce the risk of fatal ship strikes to endangered blue, fin, and humpback whales within and near Greater Farallones, Cordell Bank, Monterey Bay, and Channel Islands national marine sanctuaries. These species are protected under the Federal Endangered Species Act (16 U.S.C. 1538 et seq.), the Marine Mammal Protection Act (16 U.S.C. 1361 et seq.), and the National Marine Sanctuaries Act (16 U.S.C. 1431 et seq.). Any unauthorized take of whales, even if unintentional, by vessels transiting in U.S. waters violates federal statutes.

NOAA and the USCG request that all vessels 300 gross registered tons (GRT) or larger reduce speeds to 10-knots when transiting within the designated VSR zones. We request your cooperation with the voluntary VSR zones to protect whales that annually migrate to these areas in summer and fall to feed. NOAA analyzes all transits by vessels 300 GRT or larger via Automated Information System (AIS) data provided by USCG to assess the industry's cooperation.

NOAA and USCG are committed to the long-term protection of nationally significant marine resources by enhancing marine safety and environmental awareness in the maritime community. We encourage vessel crews to report whale sightings through the Whale Alert App (http://www.whalealert.org). If you have questions, please contact Sean Hastings, (805) 893-6424, sean.hastings@noaa.gov. We appreciate your commitment to protecting endangered and threatened whales by cooperating with the voluntary 10-knot VSR requests in 2020 off of San Francisco and southern California.

William J. Douros, Regional Director
NOAA's Office of National Marine Sanctuaries
West Coast Region

Barry A. Thom, Regional Administrator
NOAA's National Marine Fisheries Service
West Coast Region

Peter Gautier, Rear Admiral
U.S. Coast Guard
District Eleven

VOLUNTARY VESSEL SPEED REDUCTION ZONE TO REDUCE IMPACT OF SHIP STRIKES ON WHALES

NOAA strongly recommends that vessels 300 gross registered tons or larger transit the Vessel Speed Reduction Zone at 10 knots or less from May 15 – November 15, 2020. These areas contain populations of endangered blue, humpback and fin whales that are federally protected under the Federal Endangered Species Act (16 USC 1538 et seq.), the Marine Mammal Protection Act (16 USC 1361 et seq.), and the National Marine Sanctuaries Act (16 USC 1431 et seq.).

The southern California Voluntary Vessel Speed Reduction Zone extends from approximately Dana Point to Pt. Arguello as depicted below and vessels are requested to transit at 10 knots or less anywhere in this zone. Vessels already transiting south of the northern Channel Islands are also encouraged to transit outside of the Voluntary Extended Area To Be Avoided * to reduce the overlap of ships and endangered whales. Every effort should be made to comply with any instruction received from the Navy when transiting south of the Channel Islands.

Please report any collisions with whales or any observed injured or dead whales to NOAA at 877-SOS-WHALe (877-767-9425) or to the U.S. Coast Guard on VHF Channel 16. If you see whales, please record the date and location, the number of whales, the species (if known) and a description of the animals and report sightings through WhaleAlert, a free application available at http://westcoast.whalealert.org.

For more details, please contact Sean Hastings at sean.hastings@noaa.gov or (805) 893-6424.

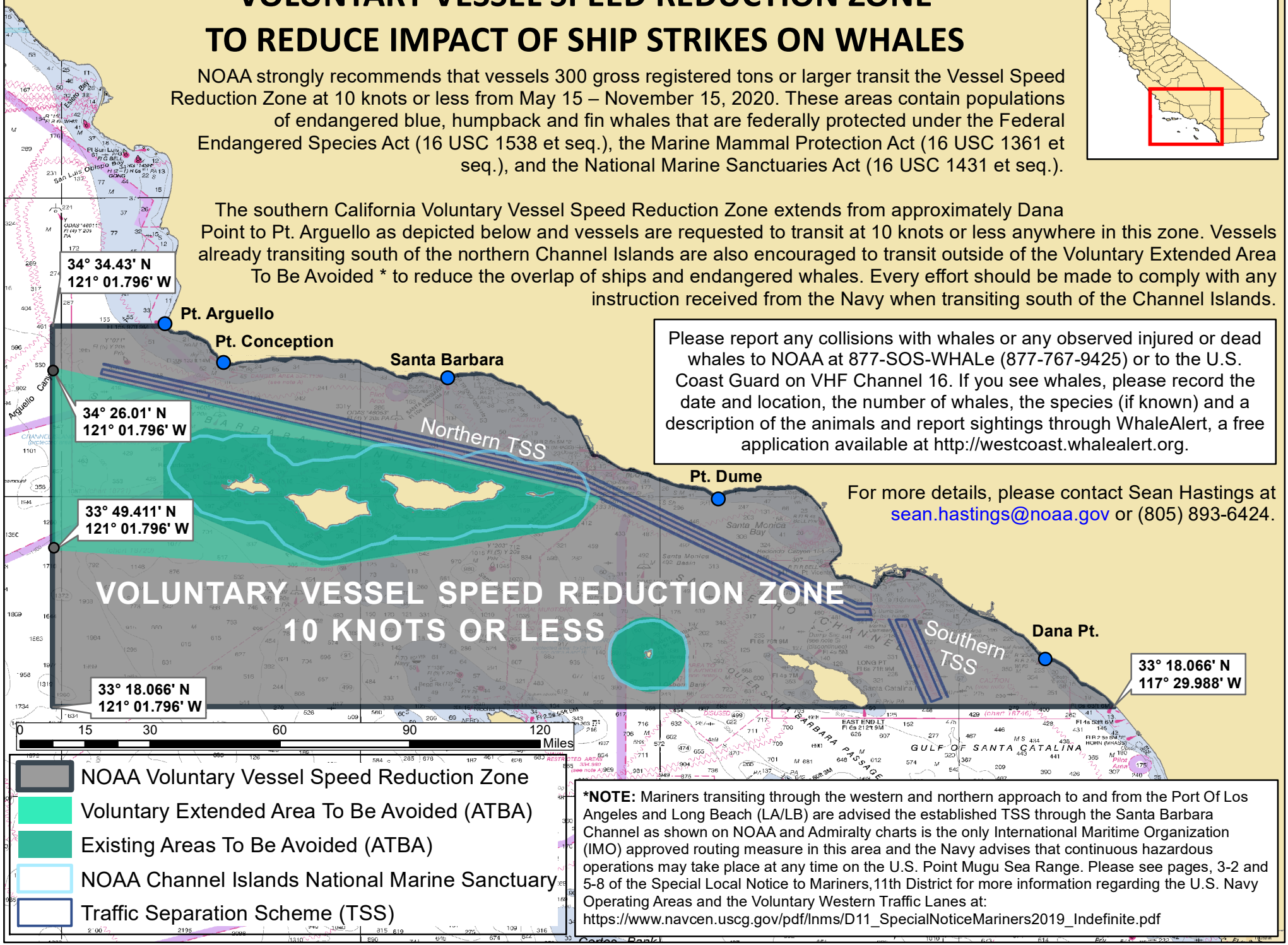

***NOTE:** Mariners transiting through the western and northern approach to and from the Port Of Los Angeles and Long Beach (LA/LB) are advised the established TSS through the Santa Barbara Channel as shown on NOAA and Admiralty charts is the only International Maritime Organization (IMO) approved routing measure in this area and the Navy advises that continuous hazardous operations may take place at any time on the U.S. Point Mugu Sea Range. Please see pages, 3-2 and 5-8 of the Special Local Notice to Mariners,11th District for more information regarding the U.S. Navy Operating Areas and the Voluntary Western Traffic Lanes at: https://www.navcen.uscg.gov/pdf/lnms/D11_SpecialNoticeMariners2019_Indefinite.pdf

Chart not for navigational purposes.

VOLUNTARY VESSEL SPEED REDUCTION ZONE TO REDUCE IMPACT OF SHIP STRIKES ON WHALES

NOAA strongly recommends that vessels 300 gross registered tons or larger transit the San Francisco Traffic Separation Scheme (SF TSS) at 10 knots or less from May 1 - November 15, 2020. These areas contain populations of endangered blue, humpback and fin whales that are federally protected under the Federal Endangered Species Act (16 USC 1538 et seq.), the Marine Mammal Protection Act (16 USC 1361 et seq.), and the National Marine Sanctuaries Act (16 USC 1431 et seq).

Please report any collisions with whales or any observed injured or dead whales to NOAA at 877-SOS-WHALe (877-767-9425) or to the U.S. Coast Guard on VHF Channel 16. If you see whales, please record the date and location, the number of whales, the species (if known) and a description of the animals and report sightings through WhaleAlert, a free application available at http://westcoast.whalealert.org.

For more details, please contact Michael Carver at michael.carver@noaa.gov

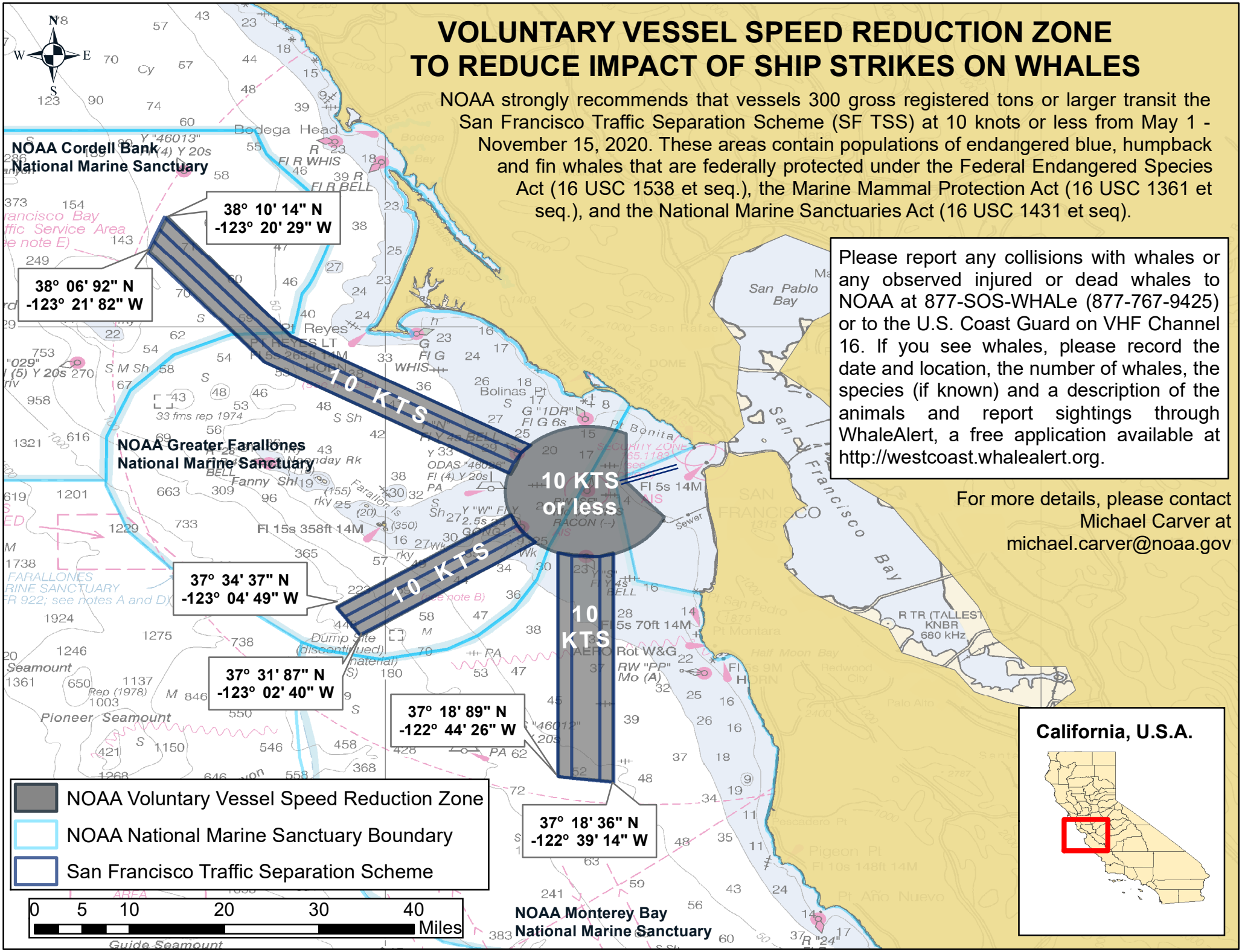

NOAA Chart 18010

This map is not to be used for navigational purposes

1 MAY 2020

VOLUNTARY VESSEL SPEED REDUCTION ZONE TO REDUCE IMPACT OF SHIP STRIKES ON WHALES

NOAA strongly recommends that vessels 300 gross registered tons or larger transit the Vessel Speed Reduction Zone at 10 knots or less from **May 15 – November 30, 2020.** These areas contain populations of endangered blue, humpback and fin whales that are federally protected under the Federal Endangered Species Act (16 USC 1538 et seq.), the Marine Mammal Protection Act (16 USC 1361 et seq.), and the National Marine Sanctuaries Act (16 USC 1431 et seq.).

The southern California Voluntary Vessel Speed Reduction Zone extends from approximately Dana Point to Pt. Arguello as depicted below and vessels are requested to transit at 10 knots or less anywhere in this zone. Vessels already transiting south of the northern Channel Islands are also encouraged to transit outside of the Voluntary Extended Area To Be Avoided * to reduce the overlap of ships and endangered whales. Every effort should be made to comply with any instruction received from the Navy when transiting south of the Channel Islands.

Please report any collisions with whales or any observed injured or dead whales to NOAA at 877-SOS-WHALe (877-767-9425) or to the U.S. Coast Guard on VHF Channel 16. If you see whales, please record the date and location, the number of whales, the species (if known) and a description of the animals and report sightings through WhaleAlert, a free application available at http://westcoast.whalealert.org.

For more details, please contact Sean Hastings at sean.hastings@noaa.gov or (805) 893-6424.

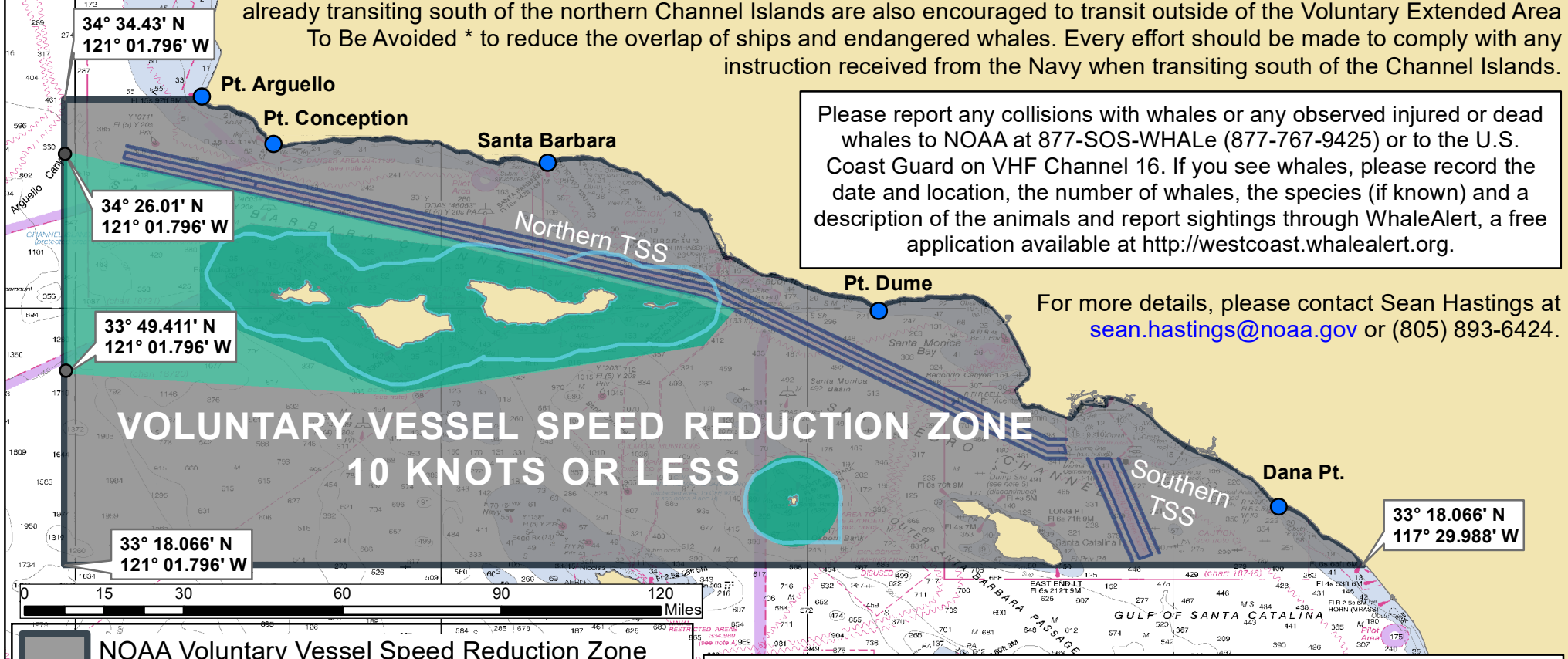

- NOAA Voluntary Vessel Speed Reduction Zone
- Voluntary Extended Area To Be Avoided (ATBA)
- Existing Areas To Be Avoided (ATBA)
- NOAA Channel Islands National Marine Sanctuary
- Traffic Separation Scheme (TSS)

***NOTE:** Mariners transiting through the western and northern approach to and from the Port Of Los Angeles and Long Beach (LA/LB) are advised the established TSS through the Santa Barbara Channel as shown on NOAA and Admiralty charts is the only International Maritime Organization (IMO) approved routing measure in this area and the Navy advises that continuous hazardous operations may take place at any time on the U.S. Point Mugu Sea Range. Please see pages, 3-2 and 5-8 of the Special Local Notice to Mariners,11th District for more information regarding the U.S. Navy Operating Areas and the Voluntary Western Traffic Lanes at: https://www.navcen.uscg.gov/pdf/lnms/D11_SpecialNoticeMariners2019_Indefinite.pdf

NOAA Chart 18022

Chart not for navigational purposes.

13 NOVEMBER 2020

Pier Scour Replacement
Downstream CA Route 160 Bridge, mile 2.0, American River

POST MILES TOTAL PROJECT	SHEET NO.	TOTAL SHEETS
4.5/5.7, R44.5	174	175

REGISTERED CIVIL ENGINEER 6-15-19 DATE

6-17-19
PLANS APPROVAL DATE

REGISTERED PROFESSIONAL ENGINEER DAVID A. ROMERO No. 61240 Exp. 06-30-19 CIVIL STATE OF CALIFORNIA

THE STATE OF CALIFORNIA OR ITS OFFICERS OR AGENTS SHALL NOT BE RESPONSIBLE FOR THE ACCURACY OR COMPLETENESS OF SCANNED COPIES OF THIS PLAN SHEET.

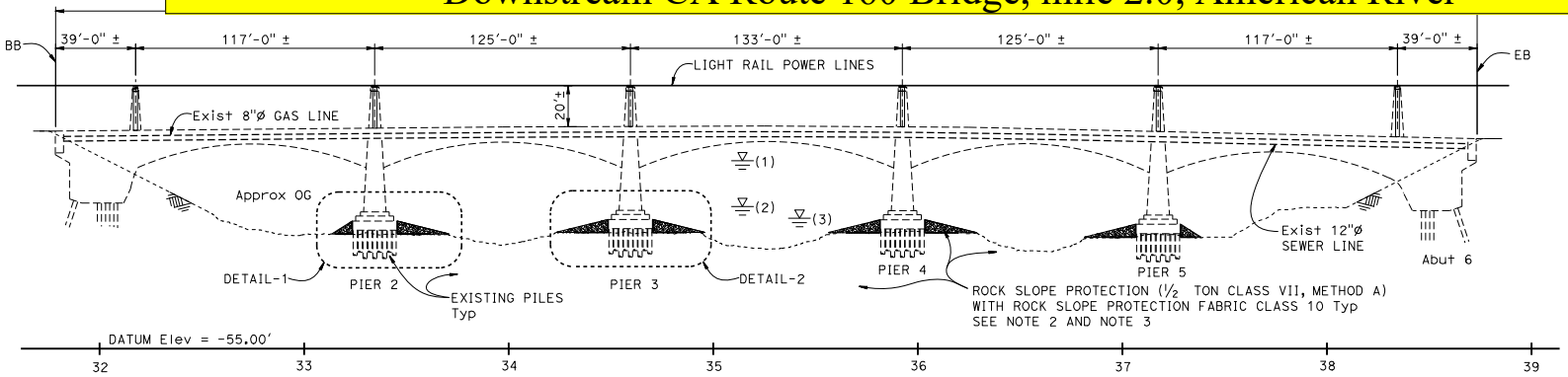

ELEVATION
1" = 30'

LEGEND:

(1) High water mark during A 100 year Storm 37.0' ±

(2) High water mark during Construction window July 15th through October 15th = 14.66' ±

(3) Low water mark during Construction window July 15th through October 15th = 8.86' ±

----- Existing Structure

Half Ton Rock Slope Protection (½ Ton Class VII, Method A)

QUANTITIES

REMOVE ROCK SLOPE PROTECTION	LUMP	SUM
ROCK SLOPE PROTECTION (½ TON, CLASS VII, METHOD A) (CY)	4,000	CY
ROCK SLOPE PROTECTION FABRIC (CLASS 10)	2,468	SQYD

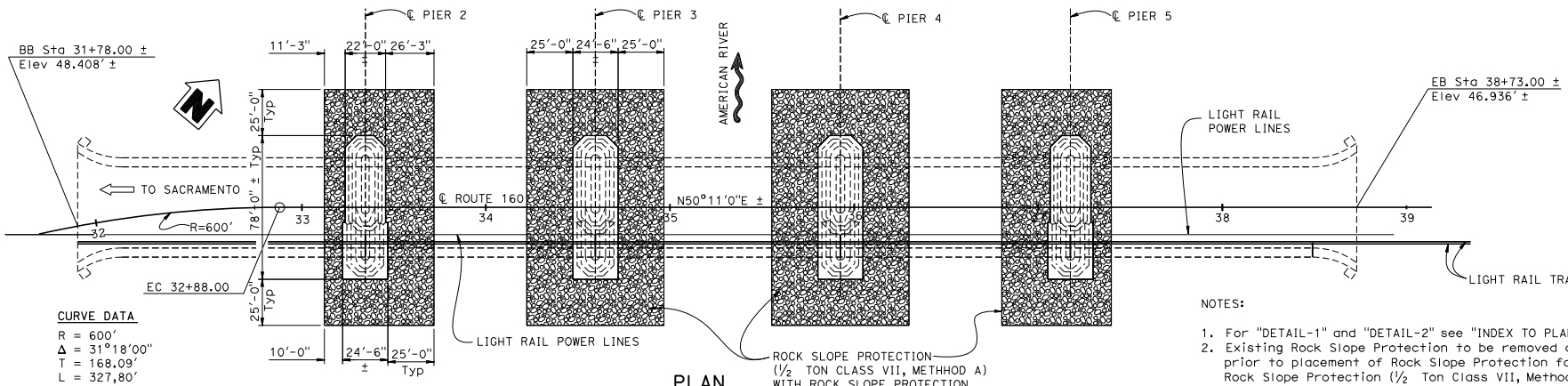

CURVE DATA

R = 600'
Δ = 31°18'00"
T = 168.09'
L = 327,80'

PLAN
1" = 30'

NOTES:

1. For "DETAIL-1" and "DETAIL-2" see "INDEX TO PLANS " sheet
2. Existing Rock Slope Protection to be removed at all existing Piers prior to placement of Rock Slope Protection fabric Class 10 with, Rock Slope Protection (½ Ton Class VII, Method A)
3. For Existing Rock Slope Protecting removal, see "EXISTING ROCK SLOPE PROTECTION REMOVAL" detail on "INDEX TO PLANS" sheet

NOTE:
THE CONTRACTOR SHALL VERIFY ALL CONTROLLING FIELD

Mariners should use the center of each navigation channel of the bridge to avoid the rock slope scour protection.

Dist	COUNTY	ROUTE	POST MILES TOTAL PROJECT	SHEET NO.	TOTAL SHEETS
03	Sac	99, 160	4.5/5.7, R44.5	175	175

REGISTERED CIVIL ENGINEER 6-15-19 DATE

6-17-19
PLANS APPROVAL DATE

REGISTERED PROFESSIONAL ENGINEER DAVID A. ROMERO No. 61240 Exp. 06-30-19 CIVIL STATE OF CALIFORNIA

THE STATE OF CALIFORNIA OR ITS OFFICERS OR AGENTS SHALL NOT BE RESPONSIBLE FOR THE ACCURACY OR COMPLETENESS OF SCANNED COPIES OF THIS PLAN SHEET.

INDEX TO PLANS

SHEET NO.	TITLES
1	GENERAL PLAN
2	INDEX TO PLANS

LEGEND:

- Existing Structure
- Existing Rock Slope Protection to be removed
- Rock Slope Protection (1/2 Ton Class VII, Method A)

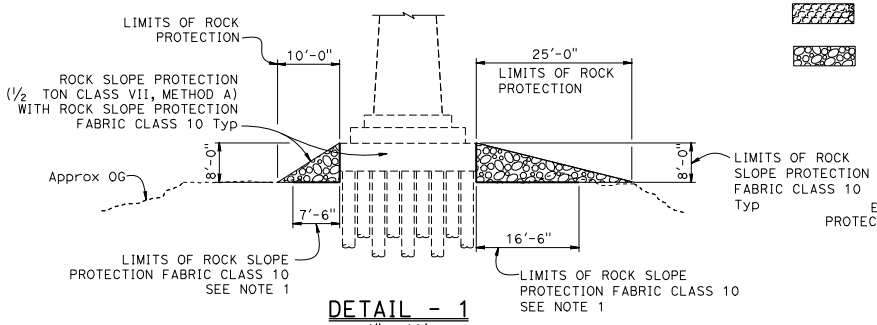

DETAIL - 1

1" = 10'

ROCK SLOPE PROTECTION

(AT PIER 2, PIER 5 OPPOSITE)

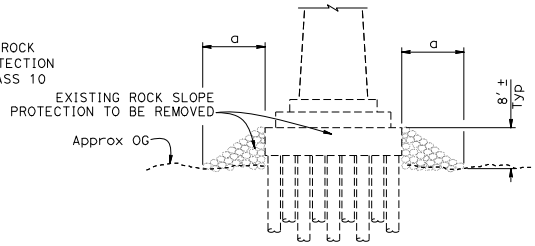

SECTION A-A

1" = 10'

Exist ROCK SLOPE PROTECTION

(TO BE REMOVED AT Exist PIERS)

CRITERIA

Design Based upon Final Hydraliics Report, Dated Nov 29, 2018

NOTES:

1. Place Rock Slope Protection Fabric Class 10 to the top of Existing footing
2. For location of "DETAIL-1" and "DETAIL-2" see "GENERAL PLAN" sheet

STANDARD PLANS 2018

A3A	ABBREVIATIONS (SHEET 1 OF 3)
A3B	ABBREVIATIONS (SHEET 2 OF 3)
A3C	ABBREVIATIONS (SHEET 3 OF 3)
A10A	LEGEND - LINES AND SYMBOLS (SHEET 1 OF 5)
A10B	LEGEND - LINES AND SYMBOLS (SHEET 2 OF 5)
A10C	LEGEND - LINES AND SYMBOLS (SHEET 3 OF 5)
A10D	LEGEND - LINES AND SYMBOLS (SHEET 4 OF 5)
A10E	LEGEND - LINES AND SYMBOLS (SHEET 5 OF 5)
A10F	LEGEND - SOIL (SHEET 1 OF 2)
A10G	LEGEND - SOIL (SHEET 2 OF 2)
A10H	LEGEND - ROCK

STANDARD PLAN SHEET NO.

DETAIL NO.

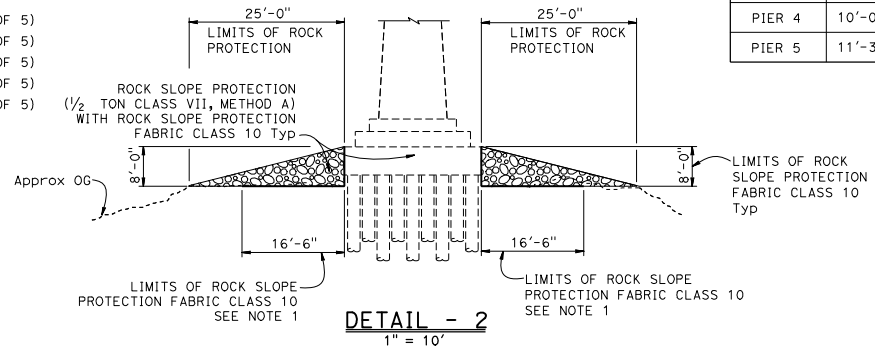

DETAIL - 2

1" = 10'

ROCK SLOPE PROTECTION

(AT PIER 3 & 4)

LOCATION	a	b
PIER 2	11'-3"±	22'-0"±
PIER 3	10'-0"±	24'-6"±
PIER 4	10'-0"±	24'-6"±
PIER 5	11'-3"±	22'-0"±

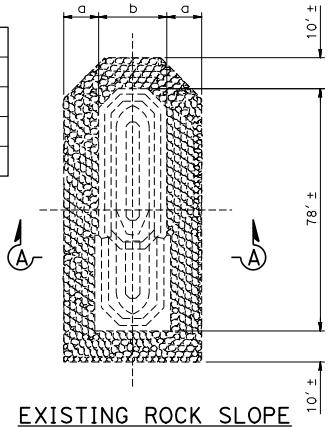

EXISTING ROCK SLOPE PROTECTION REMOVAL

1" = 20'

Exist ROCK SLOPE

(TO BE REMOVED AT Exist PIERS)

DESIGN	BY David Romero	CHECKED Randy Bains	
DETAILS	BY Min Yu	CHECKED Randy Bains	
QUANTITIES	BY David Romero	CHECKED Randy Bains	

STATE OF CALIFORNIA DEPARTMENT OF TRANSPORTATION

DIVISION OF ENGINEERING SERVICES STRUCTURE DESIGN DESIGN BRANCH 13

BRIDGE No. 24-0001L POST MILE 44.47

SCOUR MITIGATION AMERICAN RIVER BRIDGE

INDEX TO PLANS

STRUCTURES DESIGN DETAIL SHEET (ENGLISH) (REVISION 5/8/2018)

DATE PLOTTED => 11-OCT-2019 TIME PLOTTED => 11:28
FILE => 24-0001l-a-ltp.dgn USERNAME => s148585

ORIGINAL SCALE IN INCHES FOR REDUCED PLANS 0 1 2 3

UNIT: 3586
PROJECT NUMBER & PHASE: 0313000136,1 CONTRACT No.: 03-3F5404

DISREGARD PRINTS BEARING EARLIER REVISION DATES

REVISION DATES 11-28-18 04-16-19 06-28-19

SHEET 2 OF 2

NOTICE TO MARINERS

Issued By:

CENTER FOR OPERATIONAL OCEANOGRAPHIC
PRODUCTS & SERVICES

1305 East-West Highway, N/OPS3
Silver Spring, MD 20910-3281
301-713-2815
Tide.Predictions@noaa.gov
https://tidesandcurrents.noaa.gov

NOAA is Discontinuing the Printed Tide Tables and Tidal Current Tables.

NOAA is ending the production of the printed Tide Tables and Tidal Current Tables publications.
The 2020 Tide Tables and Tidal Current Tables were the final printed editions.
There will not be NOAA printed Tide Tables and Tidal Current Tables publications for 2021.

NOAA is discontinuing the production of these annual publications due to: (a) recent changes by the U.S. Coast Guard in the interpretation of the requirements for predictions, no longer requiring these publications in paper format and (b) the availability of online and electronic services providing tide and tidal current predictions which meet the U.S. Coast Guard requirements for navigation, and support other activities along the U.S. coast.

Tide and Tidal Current predictions are available through NOAA's Center for Operational Oceanographic Products and Services (CO-OPS) online services:

- NOAA Tide Predictions: https://tidesandcurrents.noaa.gov/tide_predictions.html
- NOAA Current Predictions: https://tidesandcurrents.noaa.gov/noaacurrents/Regions

These online services provide predictions which equal or exceed the accuracy and availability of the predictions for domestic locations provided through printed publications, and provide additional capabilities allowing the predictions to better meet a variety of user needs. These online services provide predictions for the U.S. coasts. International predictions will not be available from the online services. Predictions for countries outside the U.S. may be obtained through the Oceanographic / Hydrographic agency in that country.

Contact NOAA's Center for Operational Oceanographic Products and Services (CO-OPS) with questions or for further information.
E-mail: Tide.Predictions@noaa.gov
Phone: 301-713-2815

Issued: November 1, 2020

Temporary Pier Lighting Paintersville Retrofit Project

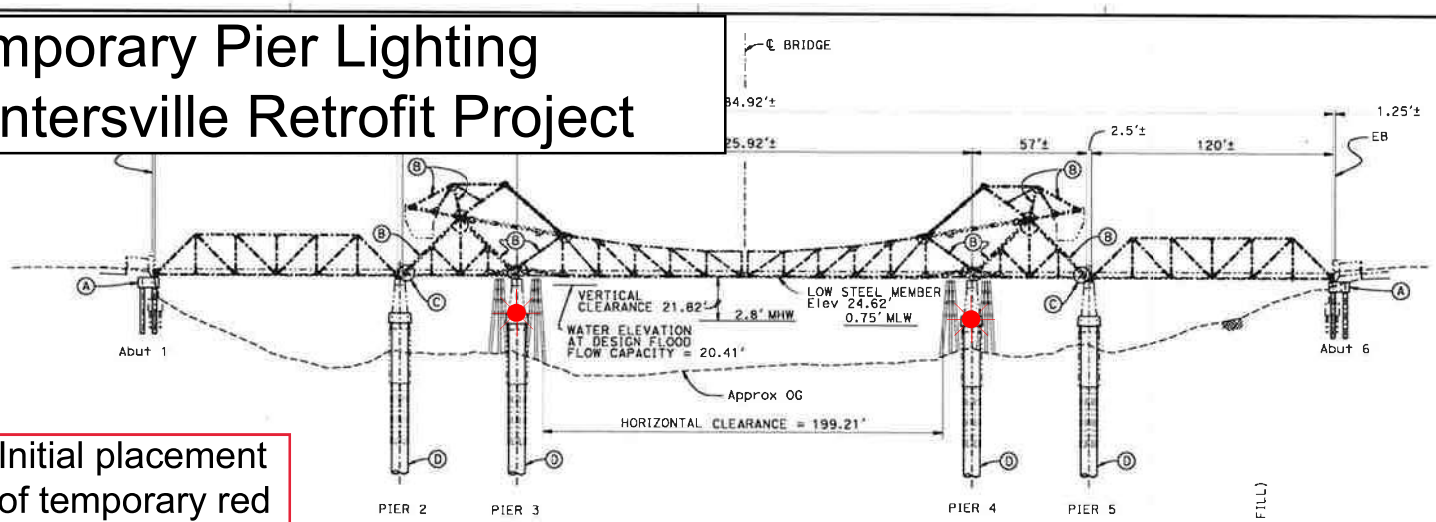

ELEVATION

LEGEND:

- (A) Abutment Retrofit
- (B) Strengthen Truss Member
- (C) Strengthen Connection
- (D) Pier Retrofit
- (E) Existing Dolphin to be removed
- (F) New 7 Pile Dolphin
- (G) For HYDROLOGIC SUMMARY see "FOUNDATION PLAN NO. 3" sheet
- Indicates new construction
- Indicates existing structure

Initial placement of temporary red lights before retrofit work.

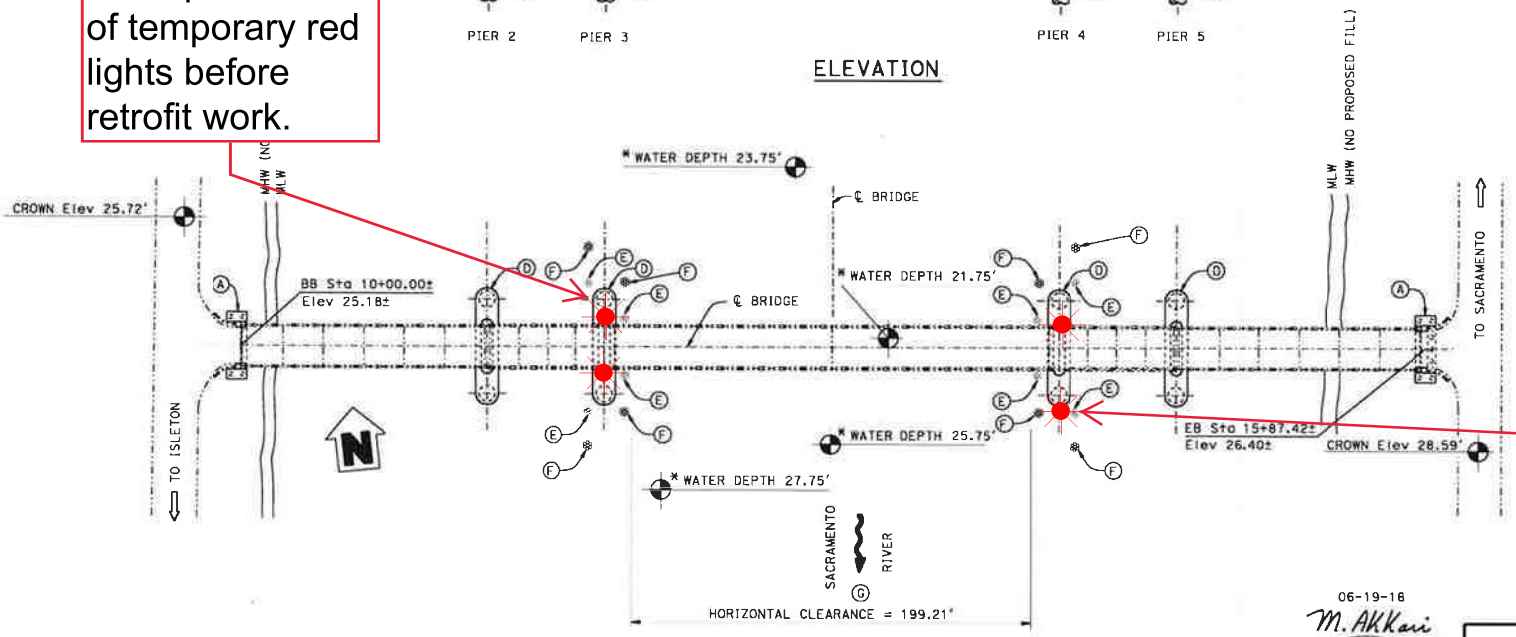

Temporary placement of red lights after pier retrofit work and before re-installation of permanent dolphins

The temporary all-round red lights will be installed on the upriver and downriver faces of piers 3 and 4 so as to be seen at 2,000 yard by approaching vessels. The pier face being worked on, where barges are obscuring the pier face, will not be required to be lit at night unless the barge is moved leaving the pier exposed.

06-19-18
M. Akkari

REGISTERED PROFESSIONAL ENGINEER
MOHAMED AKKARI
No. 44488
Exp. 3-31-20
CIVIL
STATE OF CALIFORNIA

STATE OF CALIFORNIA
DEPARTMENT OF TRANSPORTATION
PROPOSED PAINTERSVILLE BRIDGE
SEISMIC RETROFIT PROJECT
MILE 33.4, SACRAMENTO RIVER, NEAR COURTLAND

SHEET 2 OF 4

1-10-2018

Paintersville Drawbridge, mile 33.4, Sacramento River
Construction Falsework

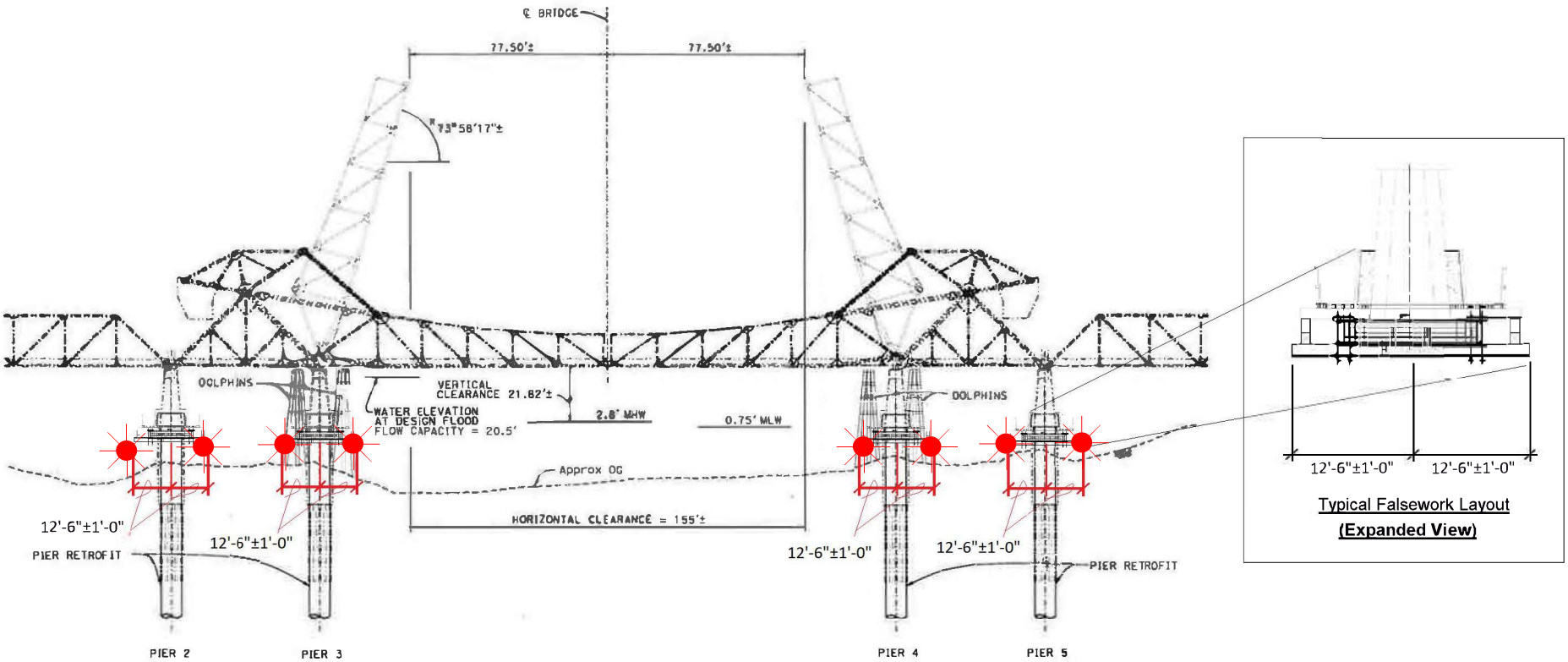

Falsework at each in-water pier in the double leaf bascule span will extend 6.75 feet from the face of each pier. The inboard edge of the falsework will not extend past the tip of each bascule leaf when the bridge is in the open-to-navigation position. The upriver and downriver corners of the falsework will be lighted at night with steady burning red lights.

REG. No. 44468 Exp. 3-31-20 CIVIL STATE OF CALIFORNIA

PROPOSED PAINTERSVILLE BRIDGE
SEISMIC RETROFIT PROJECT
MILE 33.4, SACRAMENTO RIVER, NEAR COURTLAND

SHEET 3 OF 4 1-16-2018

Temporary Access Platforms
Golden Gate Bridge, Mile 2.5, San Francisco Bay
Revised 09 Nov 20

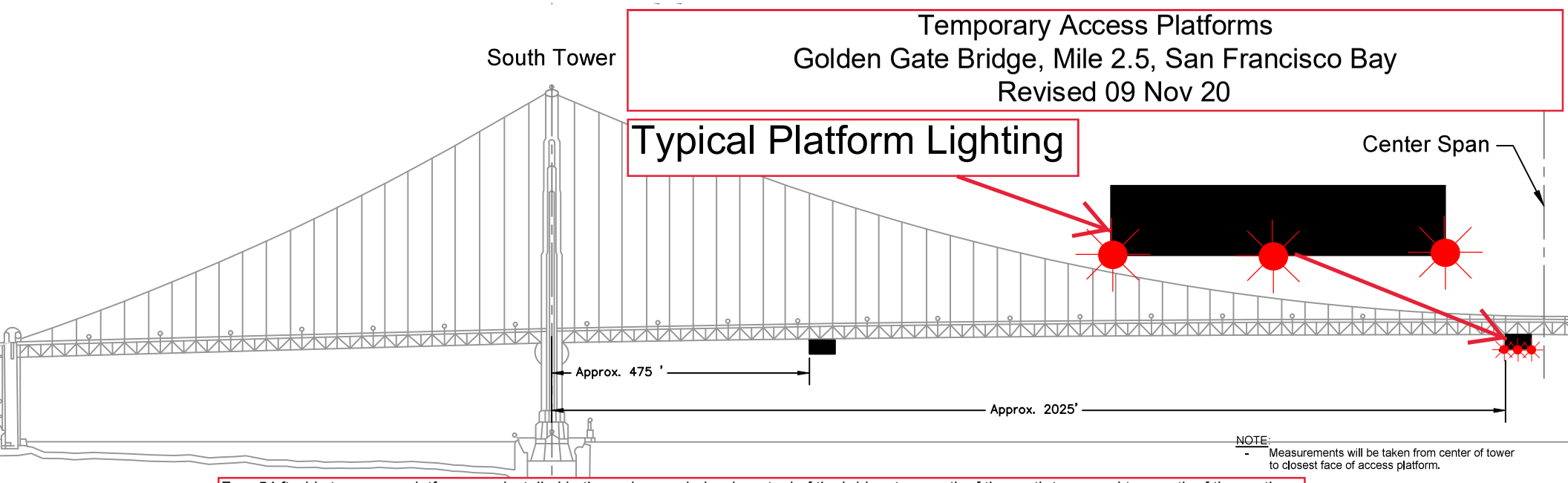

NOTE:
- Measurements will be taken from center of tower to closest face of access platform.

Four 54 ft wide temporary platforms are installed in the main span below low steel of the bridge, two south of the north tower and two north of the south tower, reducing vertical clearance by no more than 14 feet. The upstream and downstream lower edges of the temporary platform will be lighted at night with steady burning red lights visible at 2,000 yards by approaching vessels.

Temporary Access Platforms
Golden Gate Bridge, Mile 2.5, San Francisco Bay
Revised 09 Nov 20

Typical Platform Lighting

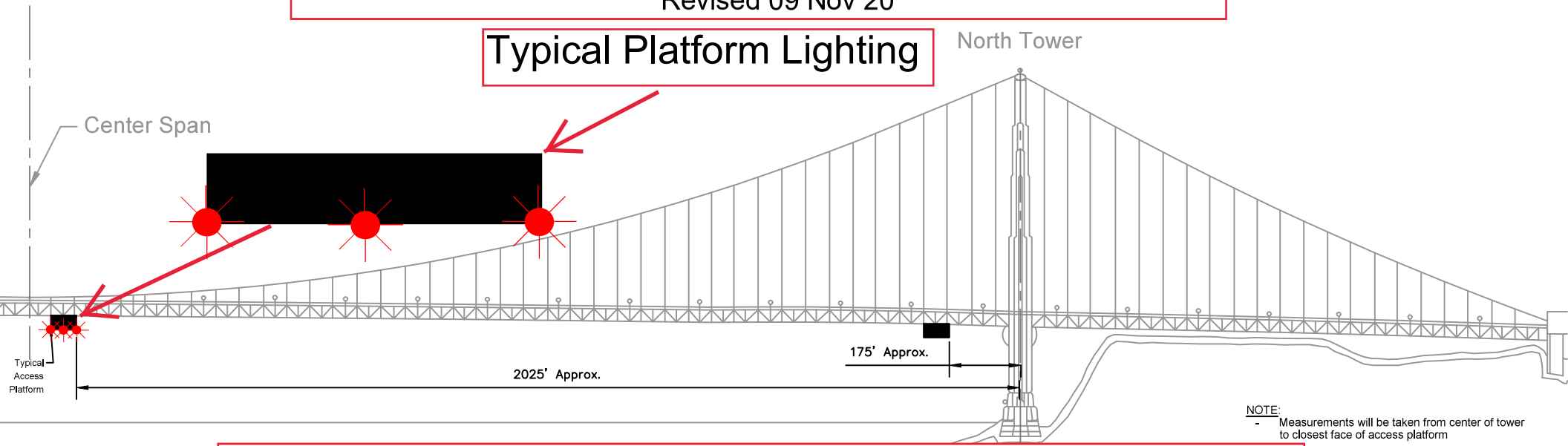

NOTE:
- Measurements will be taken from center of tower to closest face of access platform

Four 54 ft wide temporary platforms are installed in the main span below low steel of the bridge, two south of the north tower and two north of the south tower, reducing vertical clearance by no more than 14 feet. The upstream and downstream lower edges of the temporary platform will be lighted at night with steady burning red lights visible at 2,000 yards by approaching vessels.